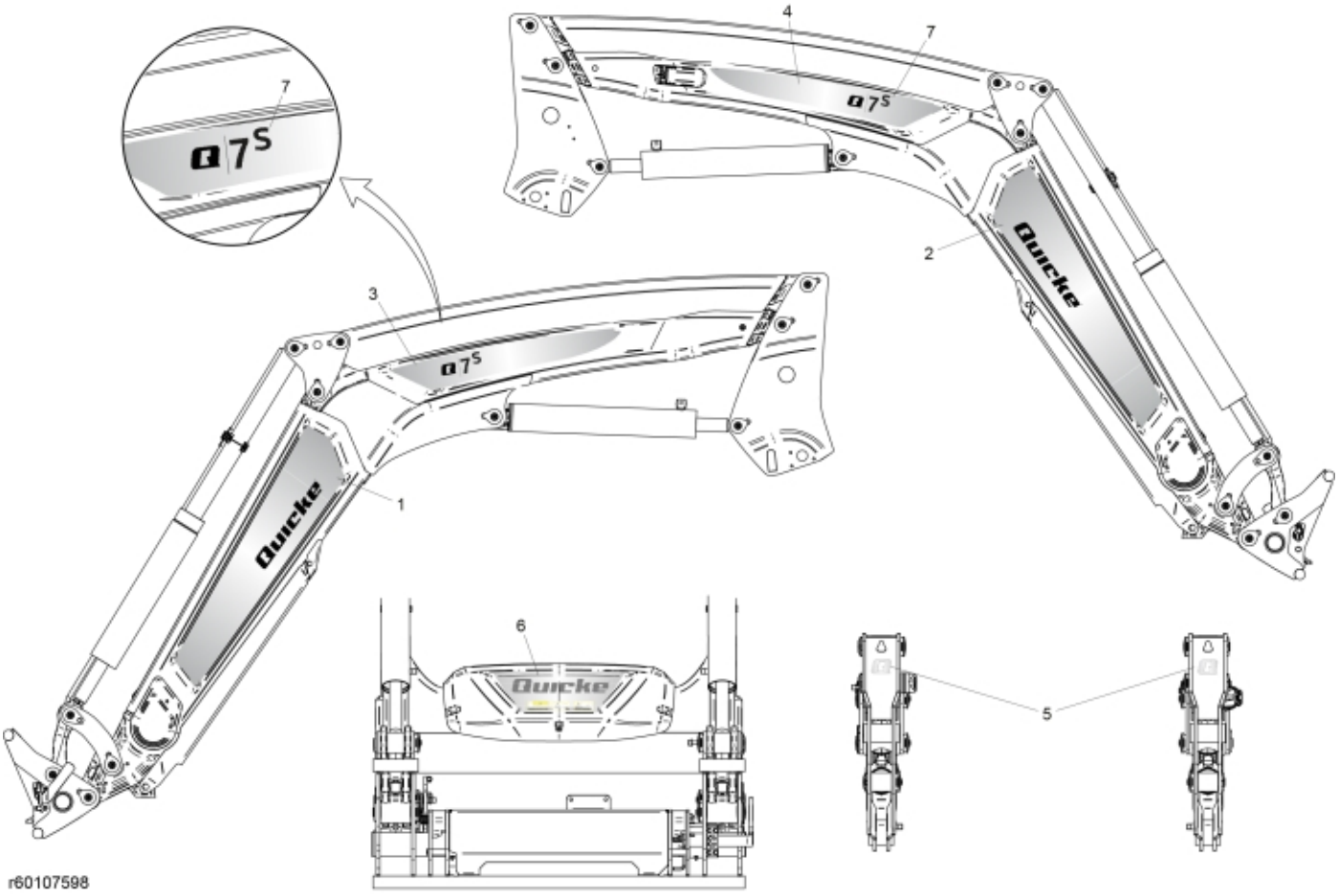

© 2025 Jost

Description	Q7S
Part assemblies	Decals

PartNo	Pos	Qty	Name	Specifications
60107860	1	1 PCS	Decal Brand, LH	Quicke
60107861	2	1 PCS	Decal Brand, RH	Quicke
60107898	3	1 PCS	Decal Model, LH	Q7
60107899	4	1 PCS	Decal Model, RH	Q7
60107906	5	2	Decal	Q
60016662	6	1 PCS	Decal, Brand	Quicke Centre Cover
60108030	7	2 PCS	Decal, Model	Large S

© 2025 Jost