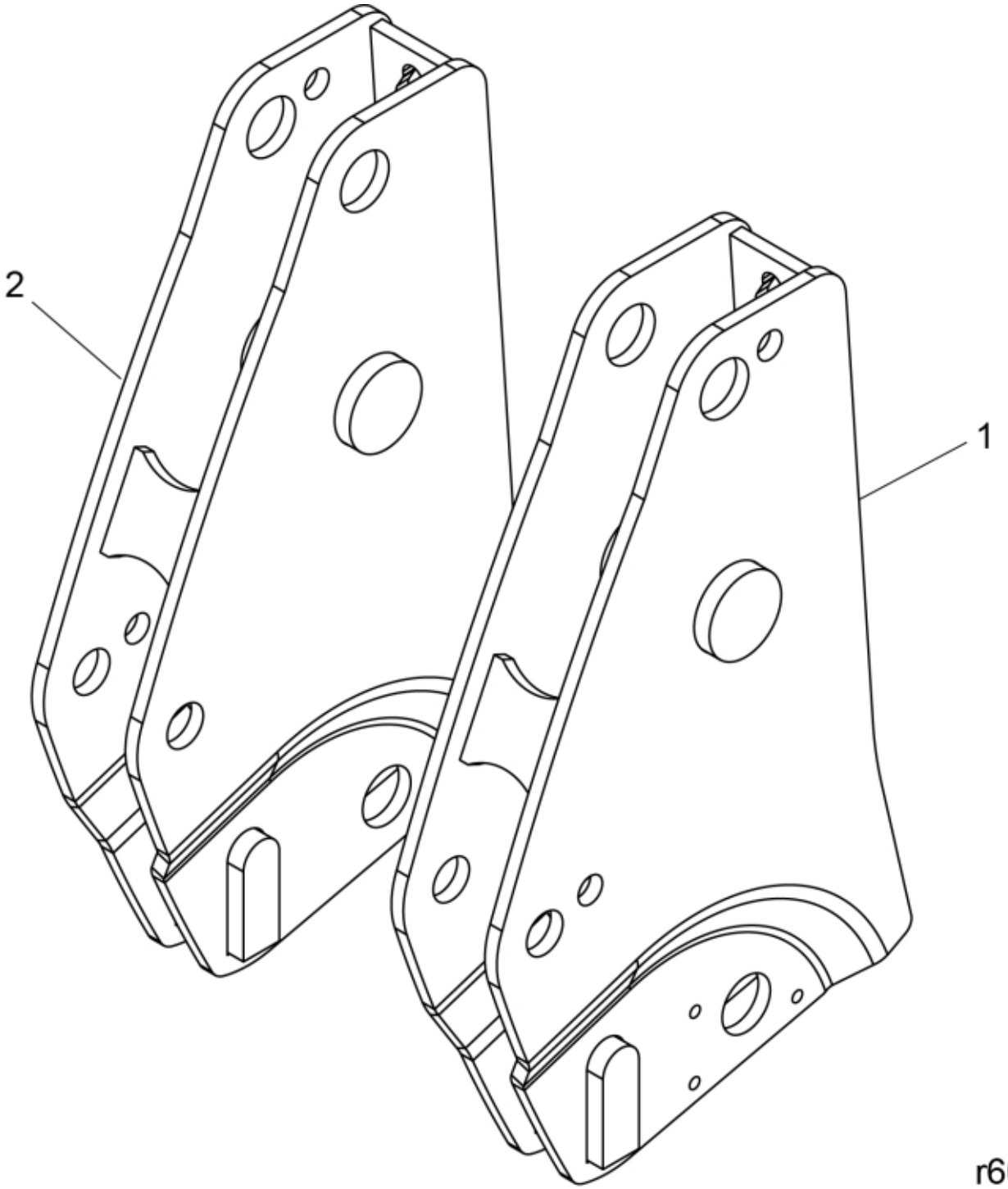

© 2025 Jost

Description	NSL
Part assemblies	Bearing box
Specification	Specification: Case Red

PartNo	Pos	Qty	Name	Specifications
60004273-13	1	1	Bearing box LH	Case Red
60004286-13	2	1	Bearing box RH	Case Red

© 2025 Jost