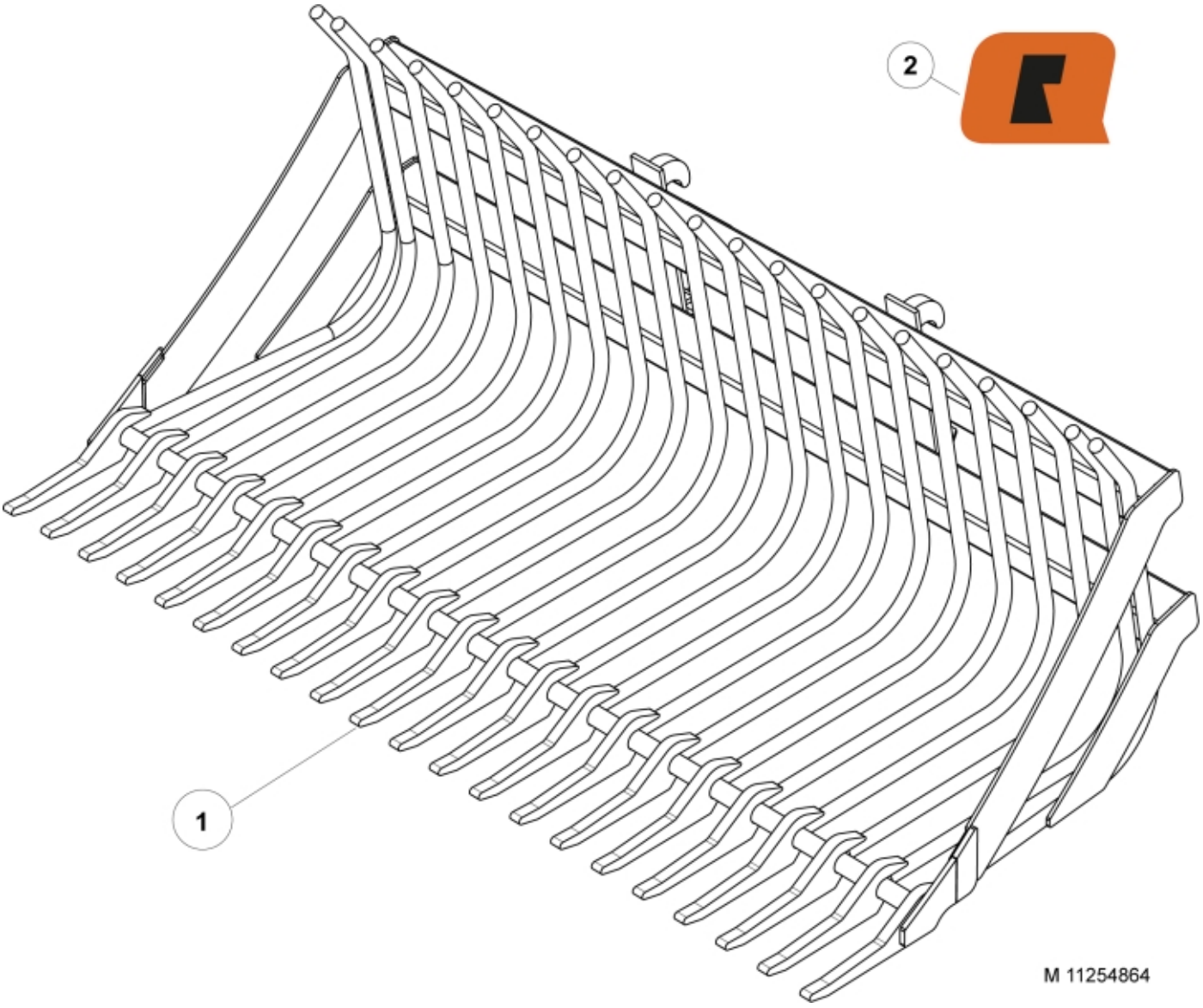

© 2025 Jost

Part assemblies	Stone Fork M+ 225 SMS
Specification	Year From: 10/1/2017 12:00:00 AM

PartNo	Pos	Qty	Name	Specifications
11254864			Stone Fork M+ 225 SMS	10/1/2017 12:00:00 AM
11260160	1	21	Tooth	
60049053	2	2	Decal	"Q" small 80x57

© 2025 Jost