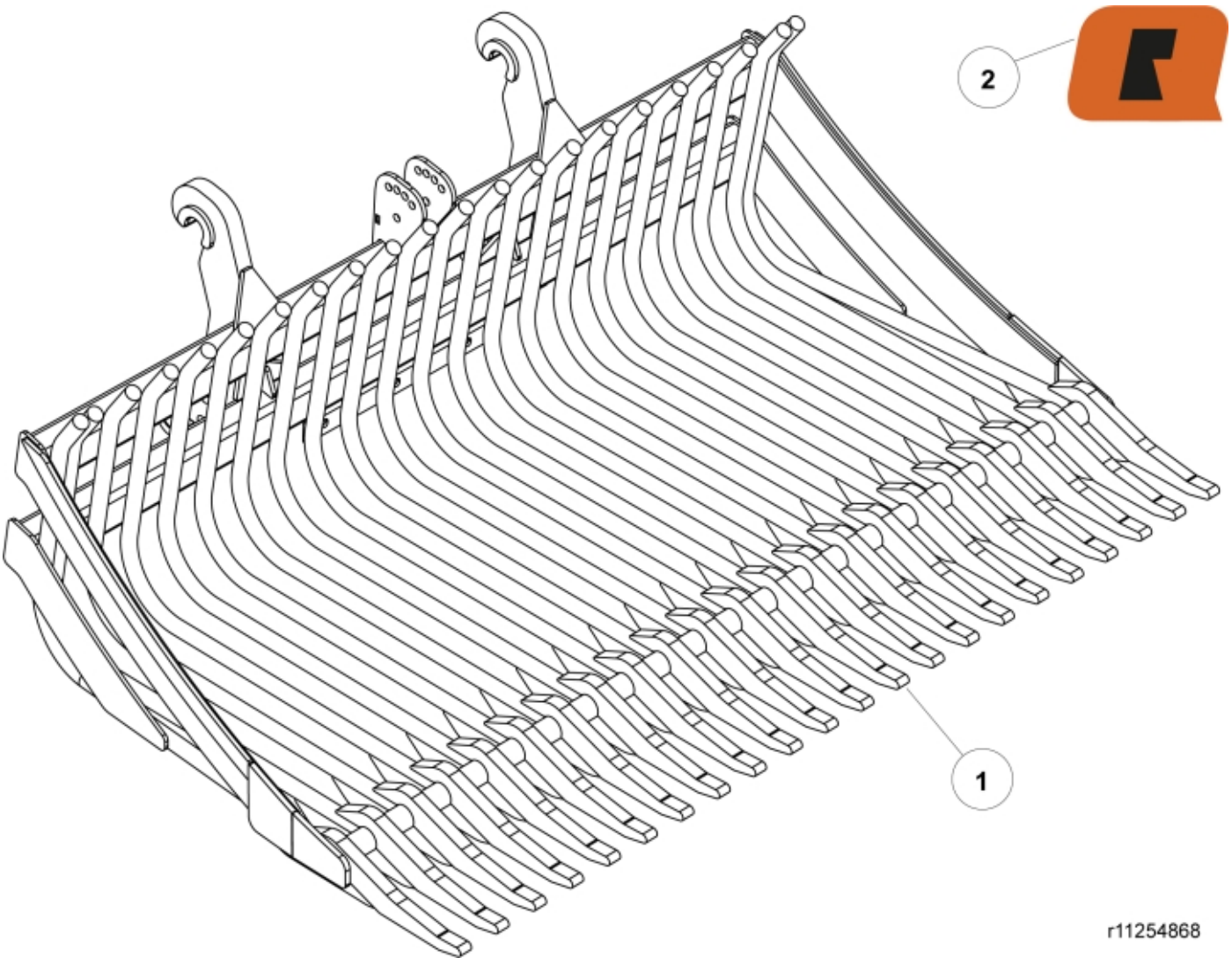

© 2025 Jost

Part assemblies	Stone Fork XL 250 BM Large
Specification	Year From: 2/1/2018 12:00:00 AM

PartNo	Pos	Qty	Name	Specifications
11254868			Stone Fork XL 250 BM Large	2/1/2018 12:00:00 AM
60022824	1	22	Tooth	
60049053	2	1	Decal	"Q" small 80x57

© 2025 Jost