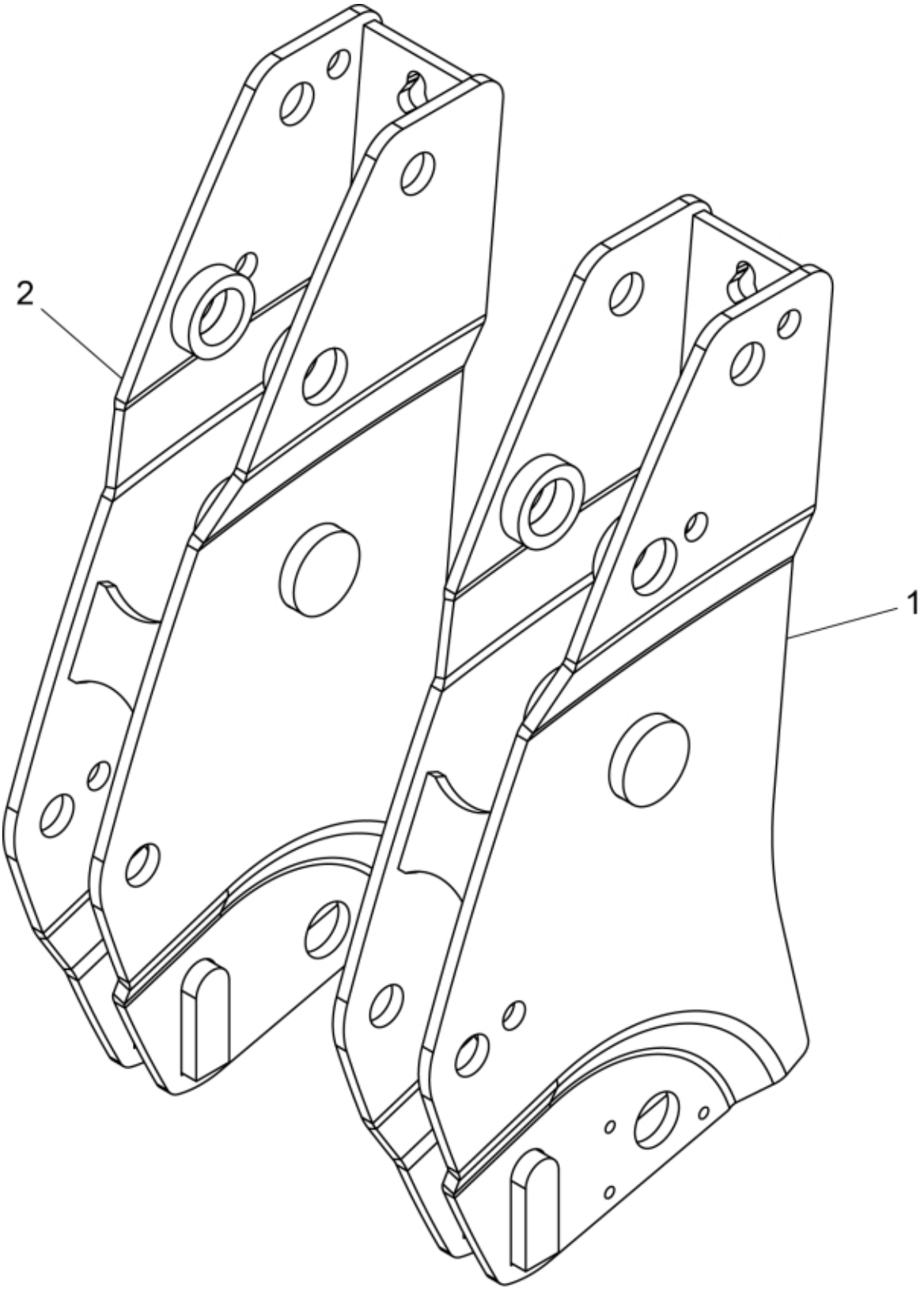

© 2025 Jost

Description	MSL
Part assemblies	Bearing box
Specification	Specification: New Holland Blue

PartNo	Pos	Qty	Name	Specifications
60004468-11	1	1	Bearing box LH	New Holland Blue
60004577-11	2	1	Bearing box RH	New Holland Blue

© 2025 Jost