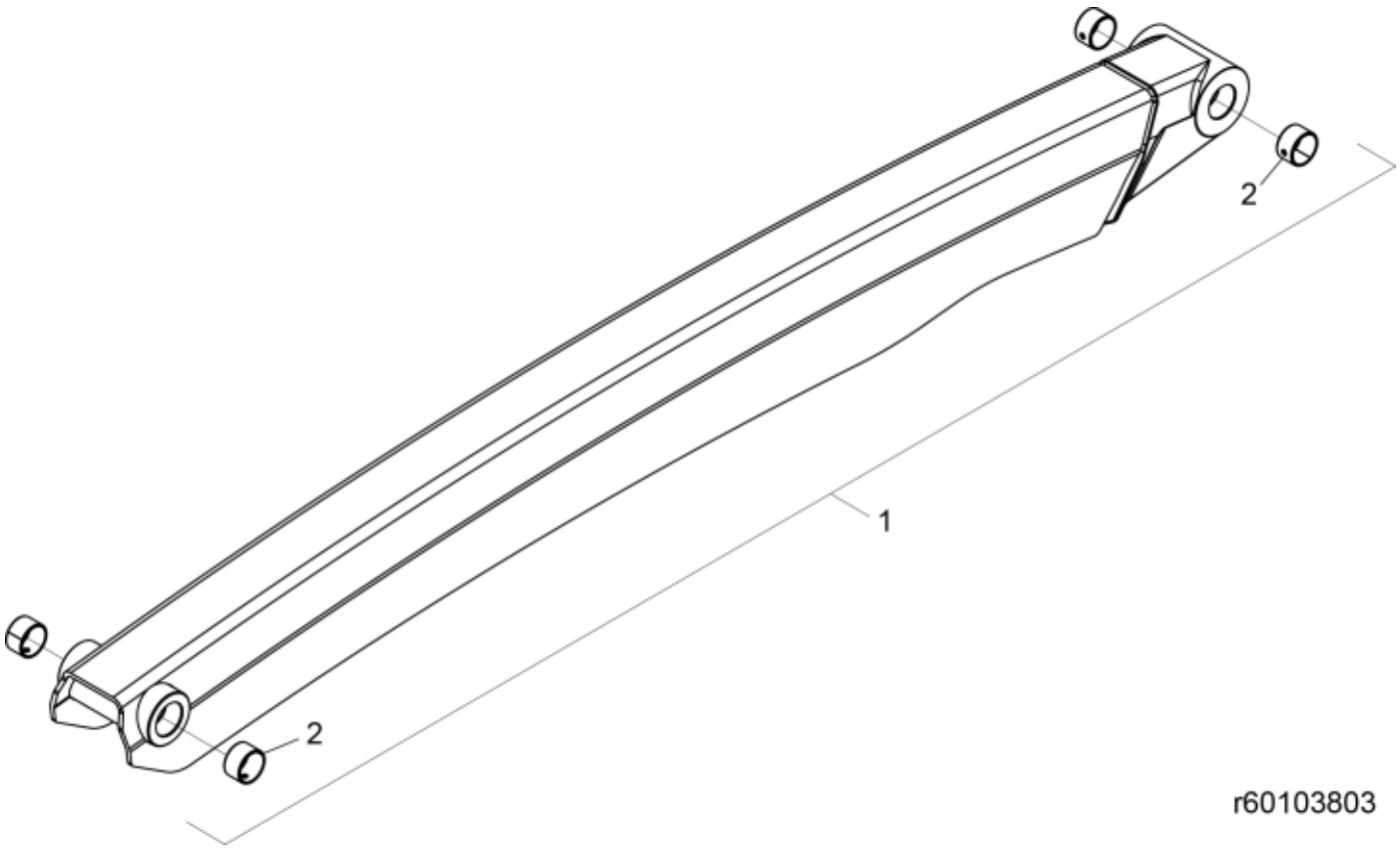

© 2025 Jost

Part assemblies	Parallel rod w. bushings
Specification	Specification: New Holland Blue

PartNo	Pos	Qty	Name	Specifications
60103807-11	1	1	Parallel rod w. bushings	New Holland Blue
5018514	2	4	• Bushing	D35 L=20

© 2025 Jost