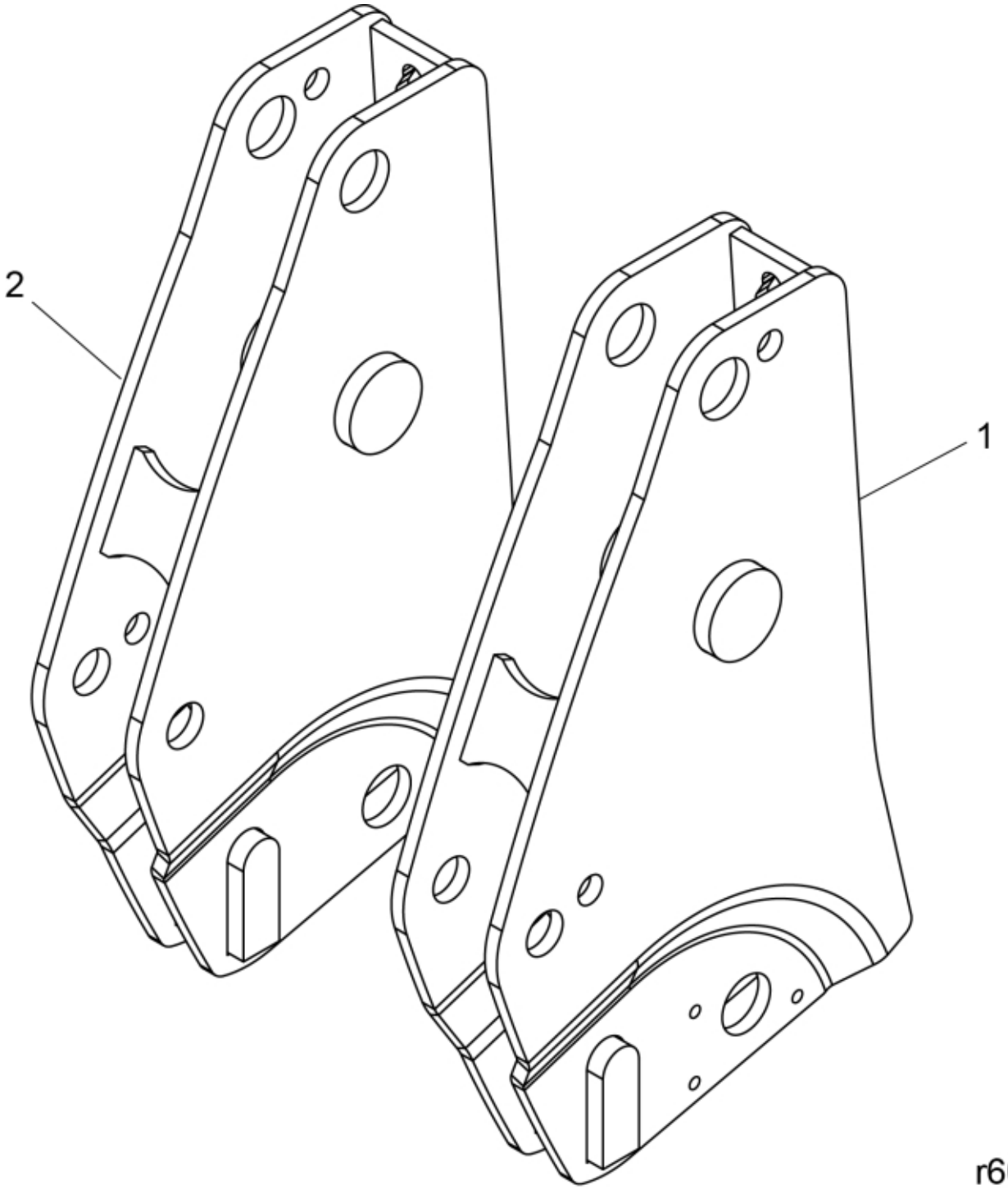

© 2025 Jost

Description	NSL
Part assemblies	Bearing box

PartNo	Pos	Qty	Name	Specifications
60107462-13	1	1	Bearing box LH	Case Red
60107463-13	2	1	Bearing box RH	Case Red

© 2025 Jost