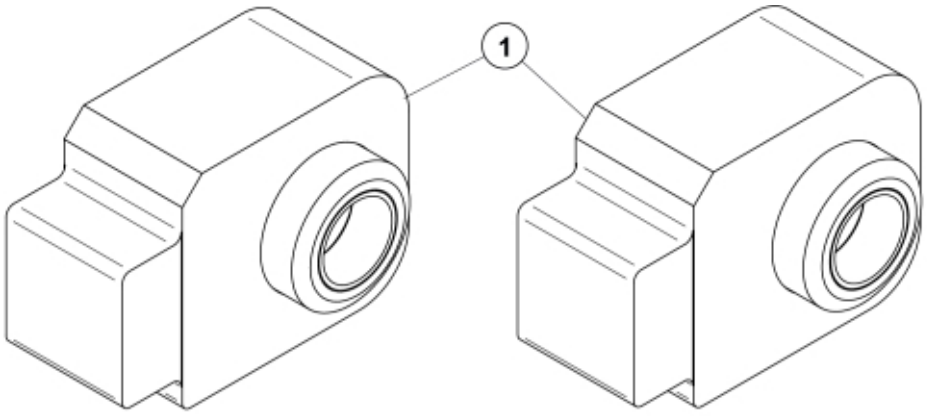

r4500479

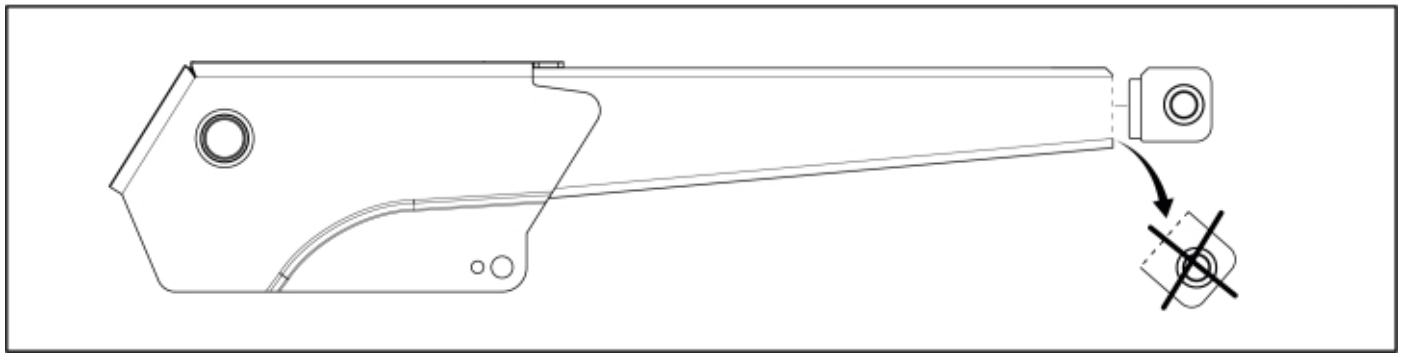

© 2025 Jost

Part assemblies Repair Kit

PartNo	Pos	Qty	Name	Specifications
4500479	1	1	Repair Kit	

© 2025 Jost