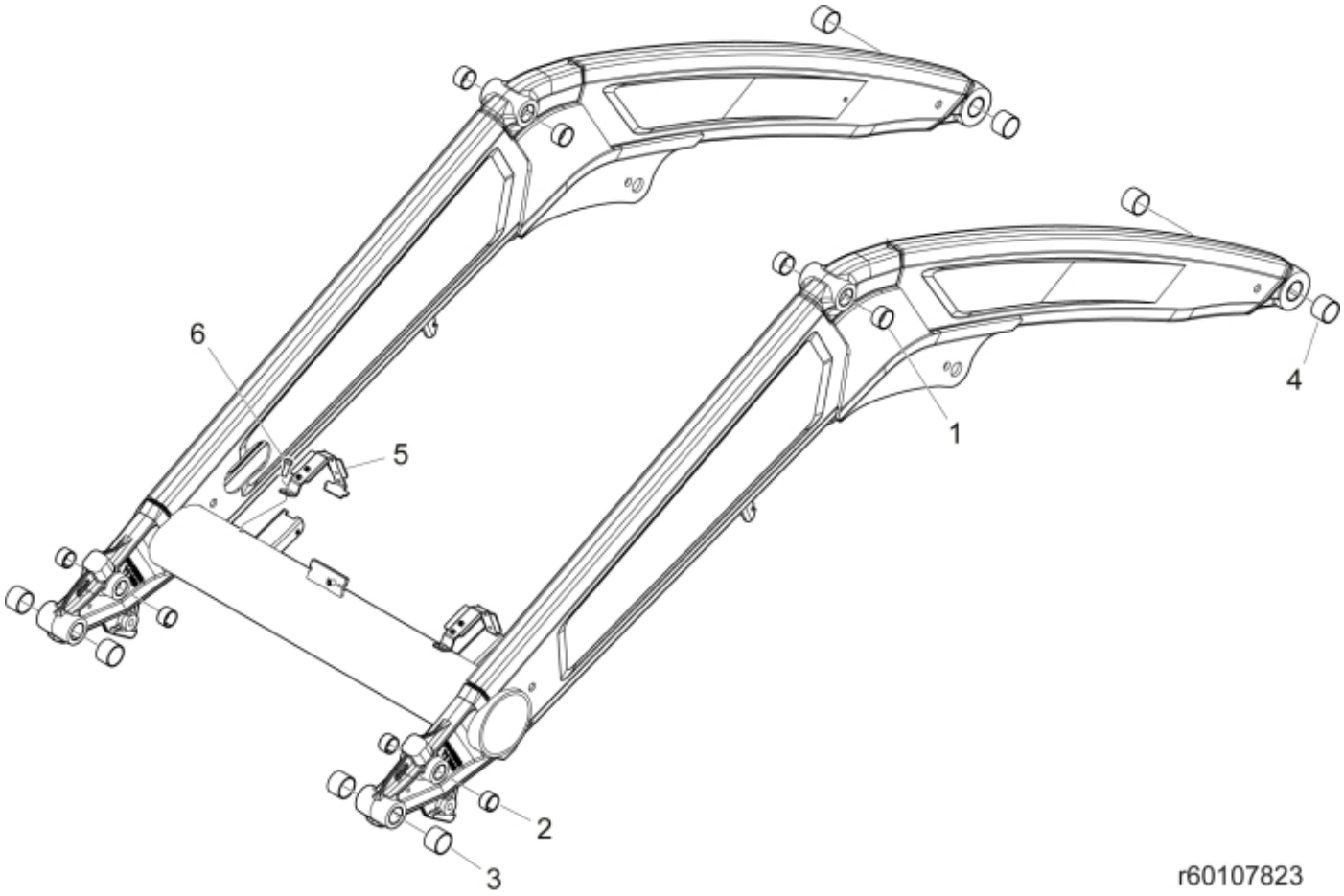

© 2025 Jost

Part assemblies	Loader beam w. bushings
Specification	Specification: Case Red

PartNo	Pos	Qty	Name	Specifications
5018513	1	4	Bushing	D40 L=20
5018514	2	4	Bushing	D35 L=20
5018904	3	4	Bushing	D40 L=30
60004007	4	4	Bushing	D45 L=30
60070968	5	2	Hose guide	
5002077	6	2	Screw	M6S 10x30

© 2025 Jost