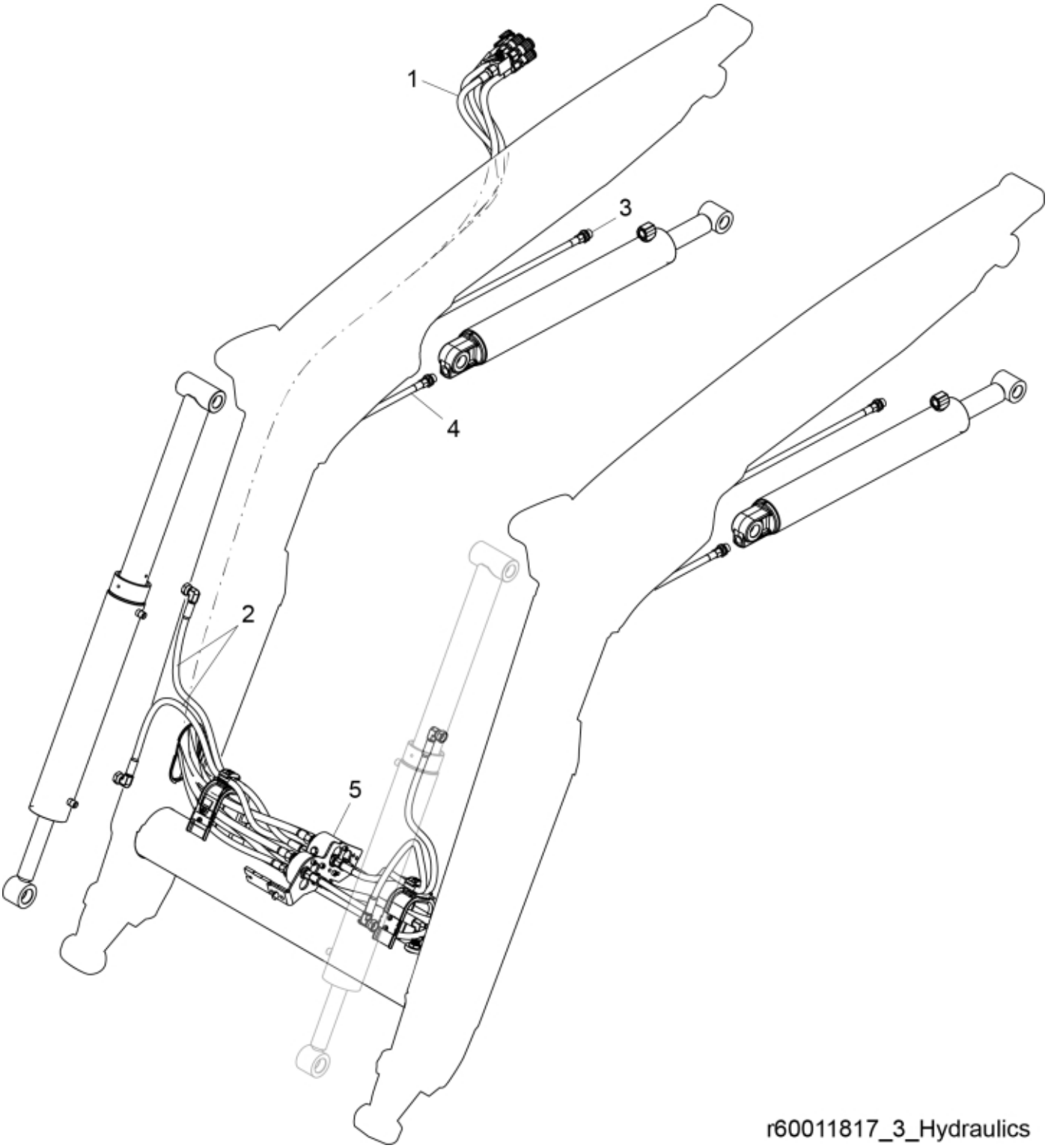

© 2025 Jost

Part assemblies Hydraulics

Hydraulics:Cylinder hoses

PartNo	Pos	Qty	Name	Specifications
- - -	1	1	Main hose kit	See separate part list
60003017	2	4	Hose	3/8" L=940 3/8GRLMA - 3/8G90LMA
60026580	3	2 PCS	Hose	3/8" L=2805 3/8GRLMA - 3/8GRLMA
60026581	4	2 PCS	Hose	1/2" L=2125 1/2GRLMA - 1/2GRLMA
4500233	5	1	CVU Basic	MSL

© 2025 Jost