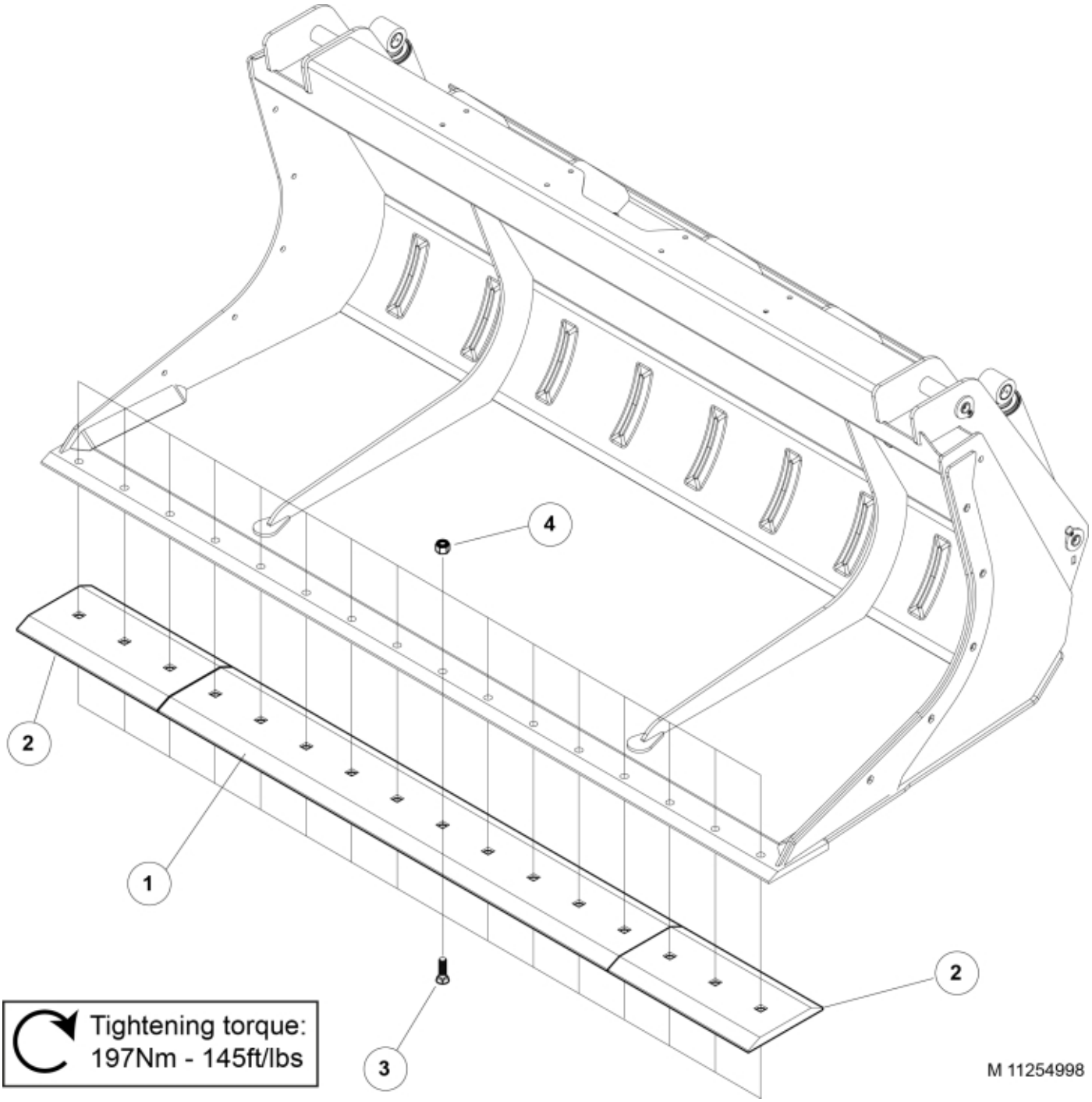

© 2025 Jost

Part assemblies Bolt on Cutting Edge kit 250

PartNo	Pos	Qty	Name	Specifications
11254998			Bolt on Cutting Edge kit 250	
60026166-22	1	1 PCS	Cutting edge	Bolt-on
60022636-22	2	2 PCS	Cutting edge	Bolt-on
5050650	3	16 PCS	Plow bolt	3/4" - 2.5 inch
5050652	4	16	Locking nut	UNC 3/4"

© 2025 Jost