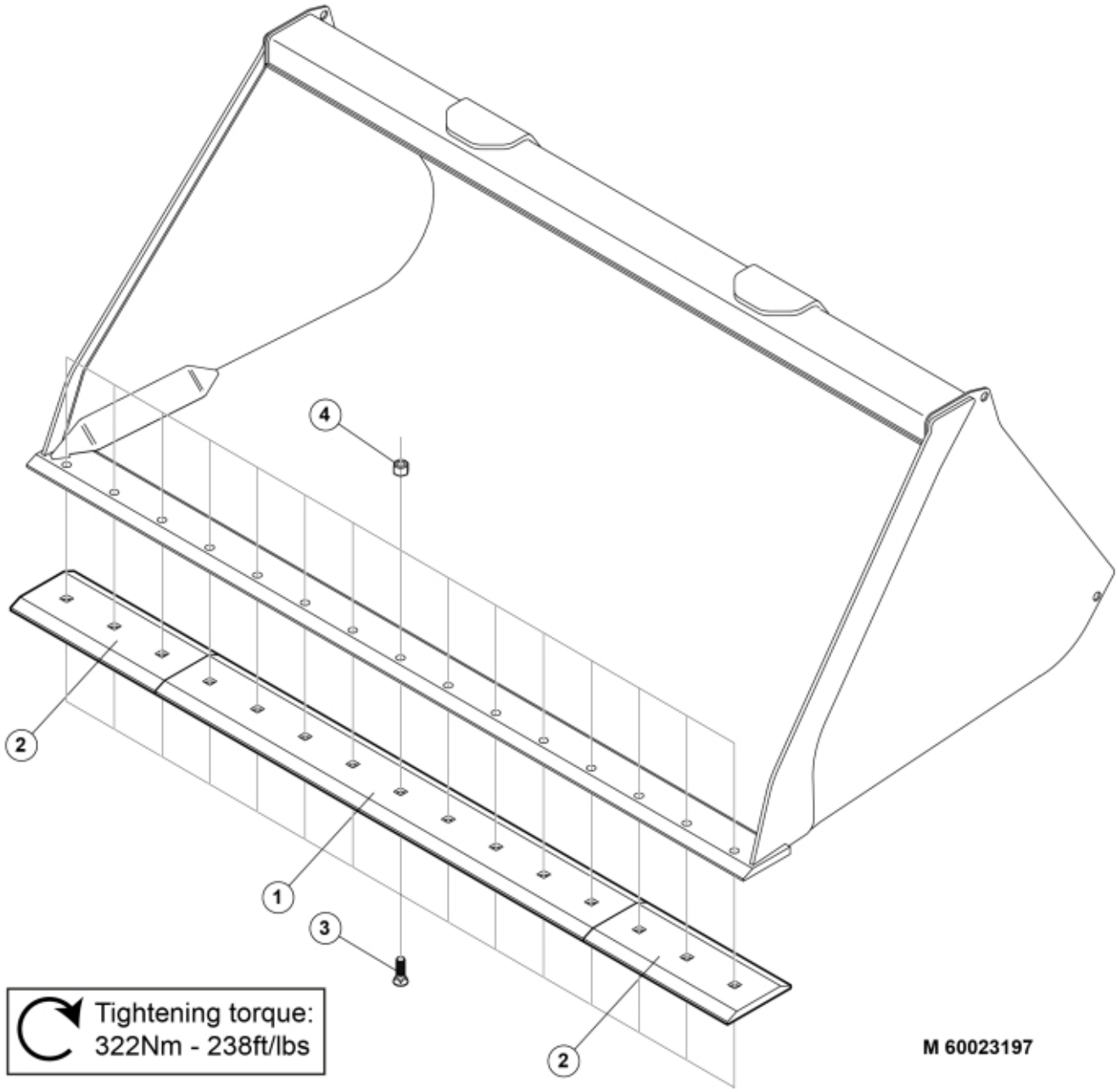

© 2025 Jost

Description	230
Part assemblies	Bolt on Cutting Edge kit 229

PartNo	Pos	Qty	Name	Specifications
60023197			Bolt on Cutting Edge kit 229	
60023198-22	1	1 PCS	Cutting edge	Bolt-on
60023094-22	2	2 PCS	Cutting edge	Bolt-on
5050650	3	15 PCS	Plow bolt	3/4" - 2.5 inch
5050652	4	15	Locking nut	UNC 3/4"

© 2025 Jost