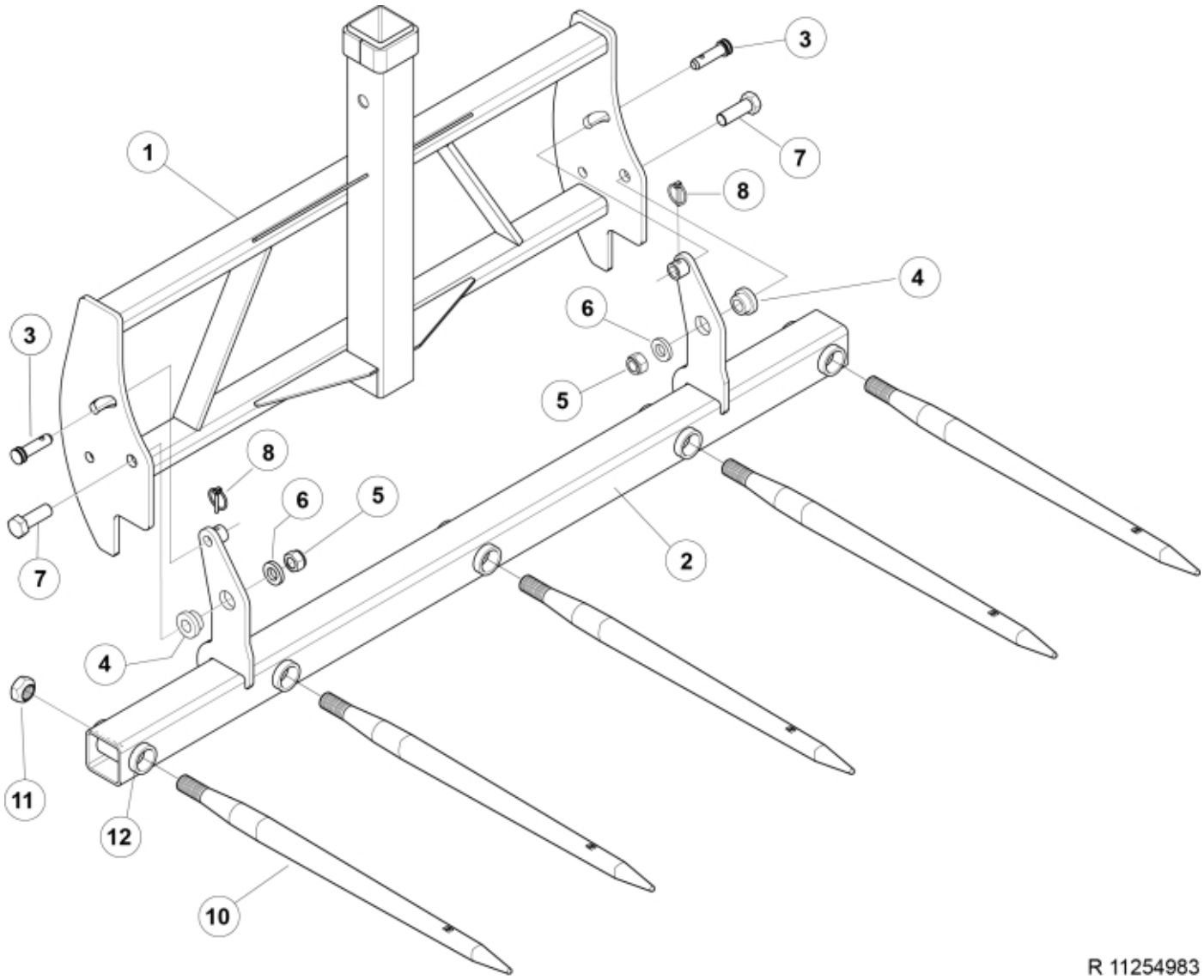

R 11254983

© 2025 Jost

Description	Tine length 827 mm
Part assemblies	Square Bale Fork
Specification	Year From: 1/1/2003 12:00:00 AM

PartNo	Pos	Qty	Name	Specifications
11254983			Square Bale Fork	1/1/2003 12:00:00 AM
11251370		1 PCS	Square Bale Fork	5/1/2022 12:00:00 AM
60013347	1	1 PCS	• Frame	140
60013415	2	1 PCS	• Beam	190
11260343	3	2	• Locking Pin	
11260344	4	2 PCS	• Spacer tube	
20708146	5	2 PCS	• Nut	M24, 708146
20721212	6	2 PCS	• Washer	721212
5002252	7	2 PCS	• Screw	M6S M24X70 (8.8)
20725101	8	2	• Linch pin	
5068114-17	10	5	Tine with nut	L=827mm (replaces 5068003)
5068116	11	1	• Nut	Conus 2
1209699	12	5	Sleeve	

© 2025 Jost