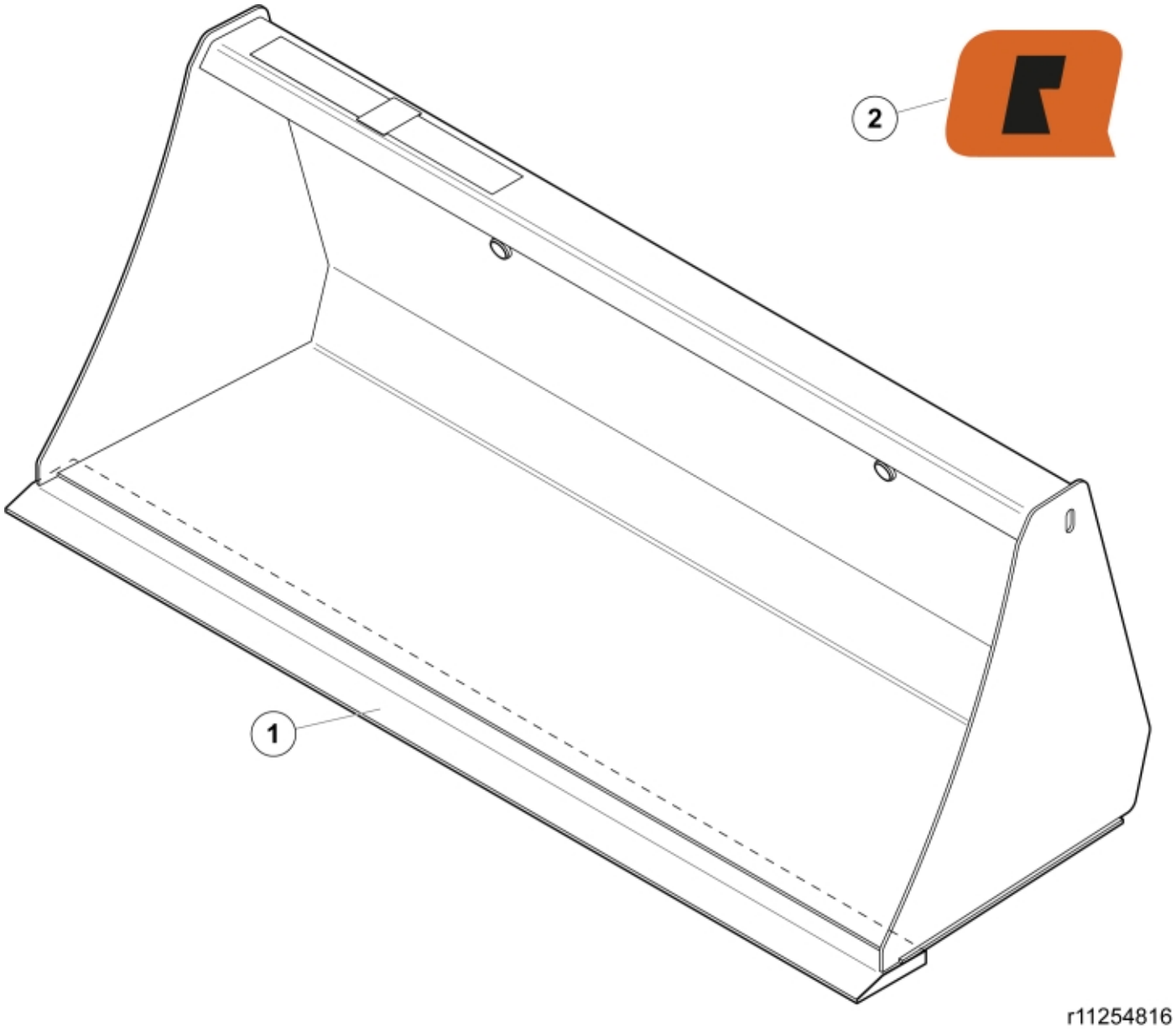

© 2025 Jost

Part assemblies	C3 Bucket 48" Pin-on

PartNo	Pos	Qty	Name	Specifications
11254816		1	C3 Bucket 48" Pin-on	
11262072	1	1	Cutting edge	
60049053	2	2	Decal	"Q" small 80x57
5022119		2	Plug	

© 2025 Jost