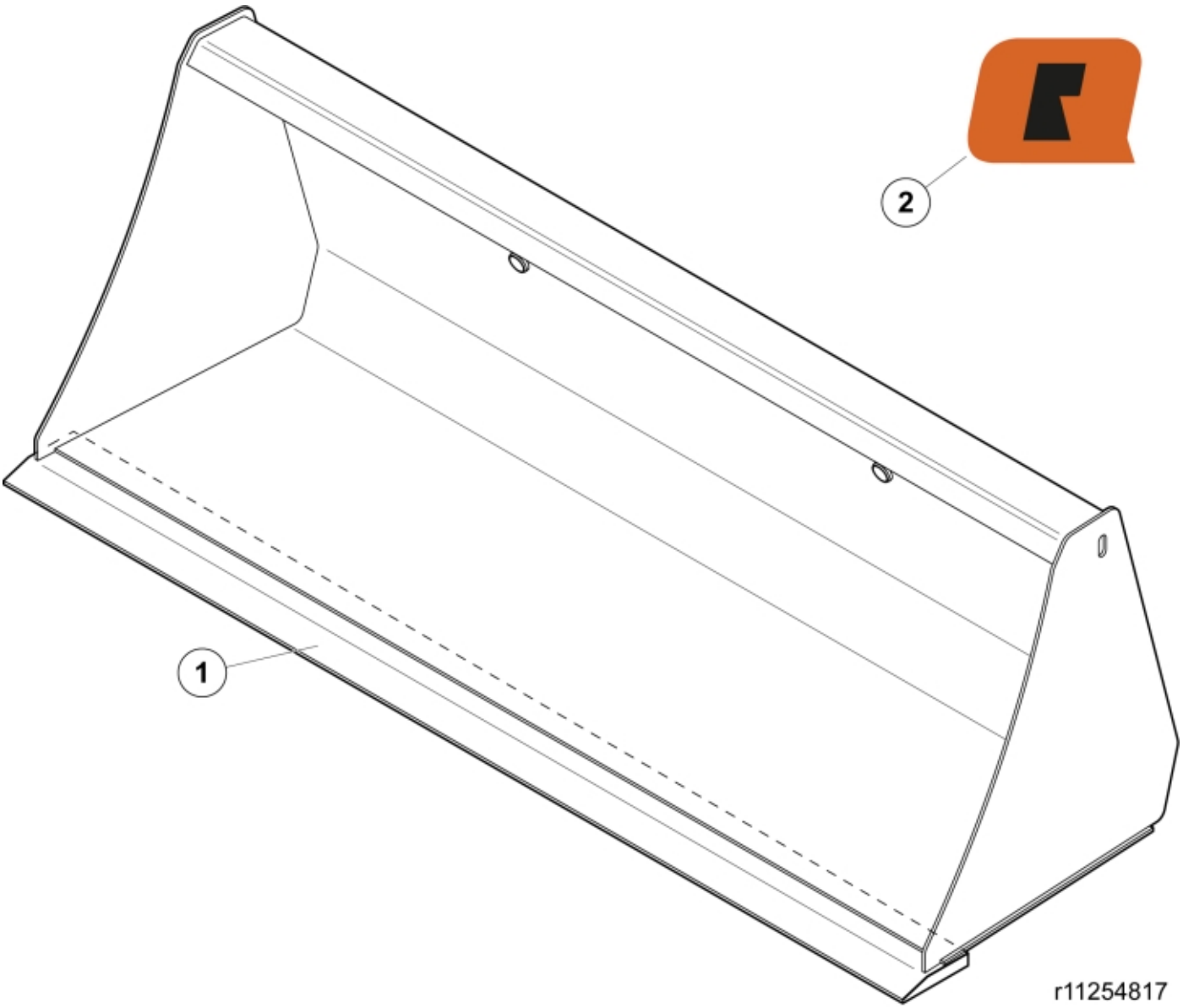

© 2025 Jost

Part assemblies	C3 Bucket 54" Pin-on

PartNo	Pos	Qty	Name	Specifications
11254817		1	C3 Bucket 54" Pin-on	
60022449	1	1 PCS	Cutting edge	
60049053	2	2	Decal	"Q" small 80x57
5022119		2	Plug	

© 2025 Jost