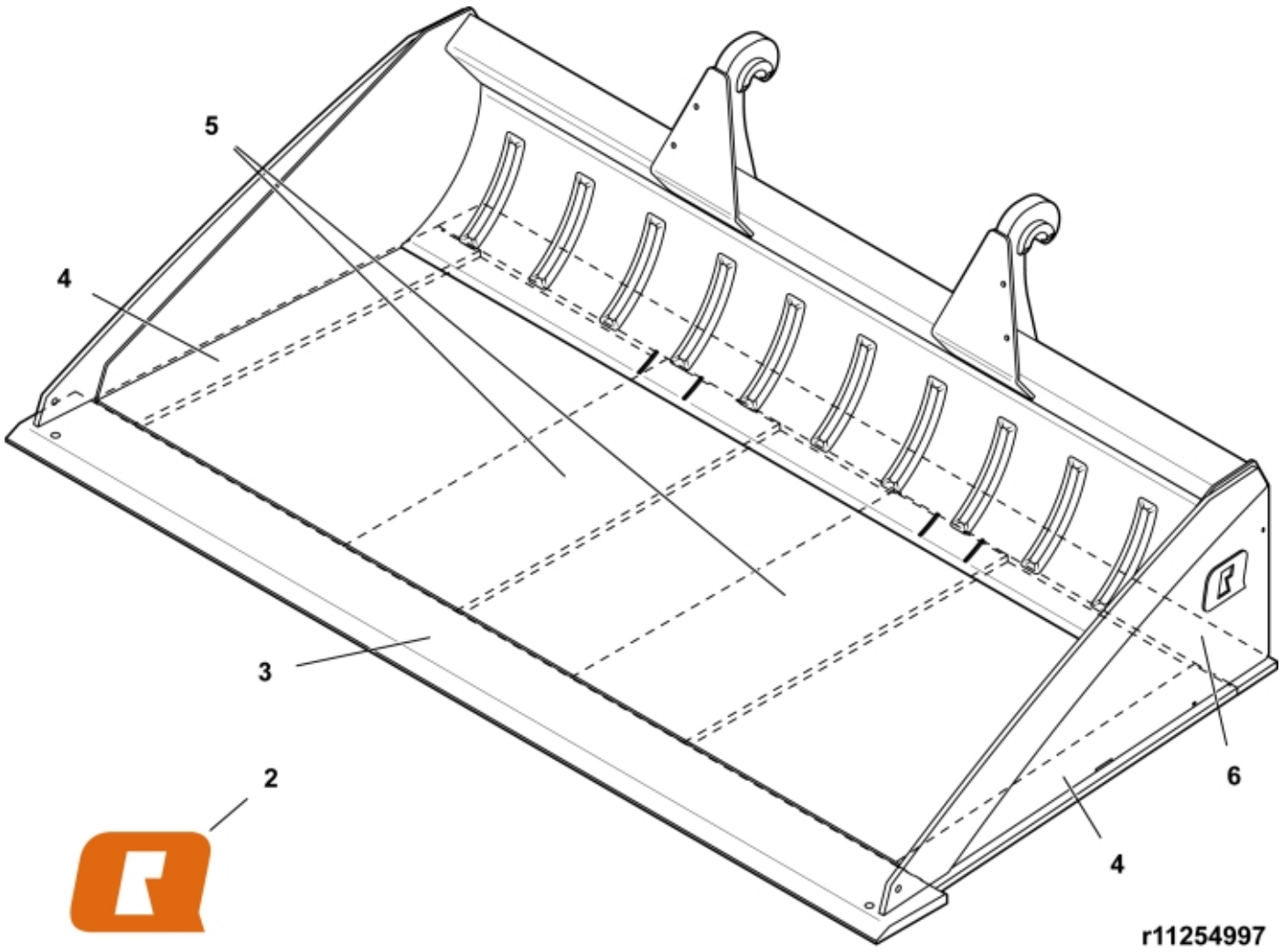



© 2025 Jost

| | |
|---|---|
| **Part assemblies** | Grading Bucket XL 300 BM Large |
| **Specification** | Year From: 2/1/2018 12:00:00 AM |

| PartNo | Pos | Qty | Name | Specifications |
|---|---|---|---|---|
| 11254997 | | 1 | Grading Bucket XL 300 BM Large | 2/1/2018 12:00:00 AM |
| 60056248 | 2 | 2 | Decal | "Q" Large 158 mm |
| 60025332 | 3 | 1 PCS | Cutting edge | |
| 60025342 | 4 | 2 PCS | Wearing strip | |
| 60028524 | 5 | 2 PCS | Wearing strip | |
| 60025340 | 6 | 1 PCS | Cutting edge | |
| 5022119 | | 2 | Plug | |


© 2025 Jost