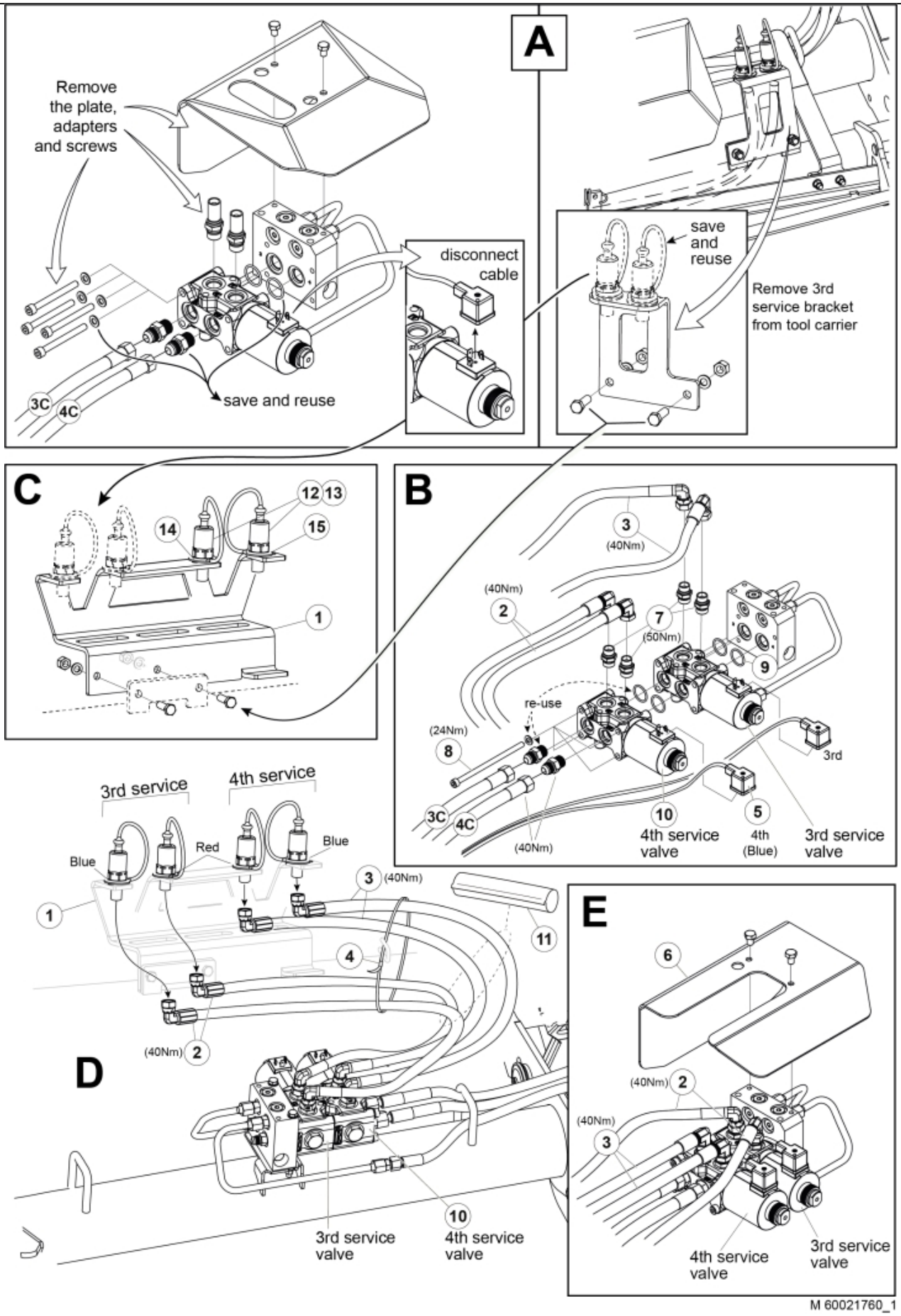
A
Remove the plate, adapters and screws
3C
4C
save and reuse
disconnect cable
save and reuse
Remove 3rd service bracket from tool carrier
C
12
13
14
15
1
B
3
(40Nm)
(40Nm)
2
7
(50Nm)
9
re-use
(24Nm)
8
3rd
3C
4C
(40Nm)
10
4th service valve
5
4th (Blue)
3rd service valve
3rd service
4th service
Blue
Red
Blue
1
3
(40Nm)
11
4
(40Nm)
2
D
3rd service valve
10
4th service valve
E
6
(40Nm)
2
(40Nm)
3
4th service valve
3rd service valve
M 60021760_1

© 2025 Jost

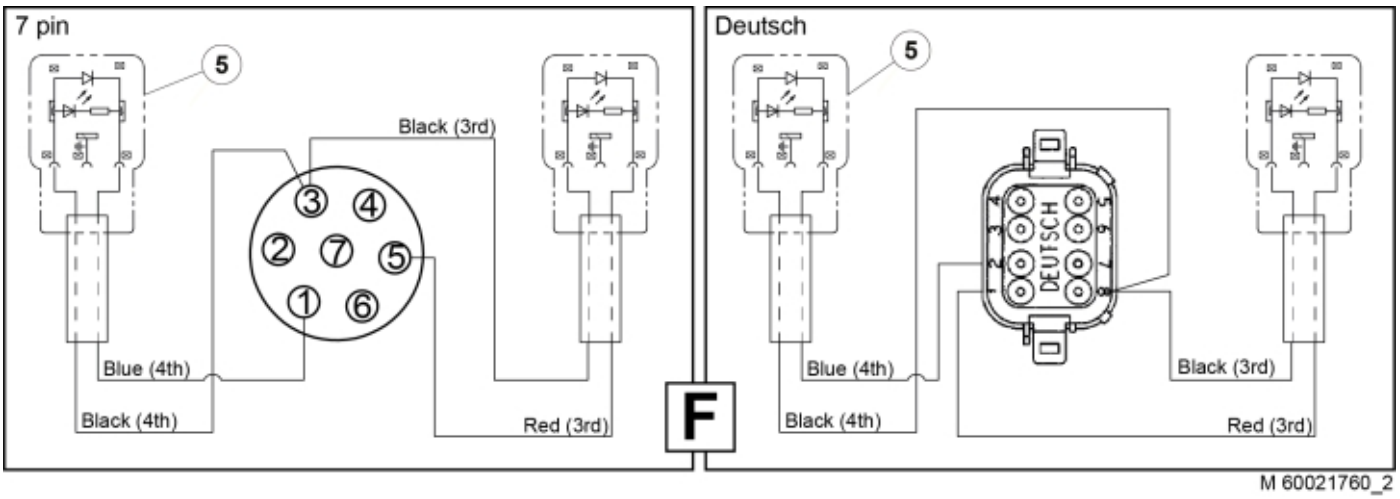

M 60021760_2

© 2025 Jost

Part assemblies	4th service
Specification	Specification: X-series
	Year From: 1/1/2017 12:00:00 AM

Direct:Direct controlled valve

PartNo	Pos	Qty	Name	Specifications
60021760		1 PCS	4th service	X-series, 1/1/2017 12:00:00 AM
60021574	1	1 PCS	Bracket	
60029889	2	2 PCS	Hose	3/8" L=1130 3/8G90LMA - 3/8G90LMC
60028916	3	2 PCS	Hose	3/8" L=840 3/8G90LMC - 3/8G90LMC
5033606	4	1	Cable tie	7,5 x 385
60016088	5	1 PCS	Harness	
60016077	6	1 PCS	Protection plate	4th service
5050816	7	4 PCS	Adaptor	UNF 3/4"-16-G3/8"
5050630	8	4	Screw	MC6S M8x150 (8.8)
5050388	9	2	O-ring	Ø25 0,7x2,62
60009542	10	1	Valve assy.	Roquet
60019369	11	1	Hose cover	
5044940	12	2	Coupling	ISO-A 1/2" Male - G3/8
5044129	13	2	Dust Cover	1/2" Male
5022157	14	1	Washer, red	
5022159	15	1	Washer, blue	

© 2025 Jost