Quicke

Original Implements™

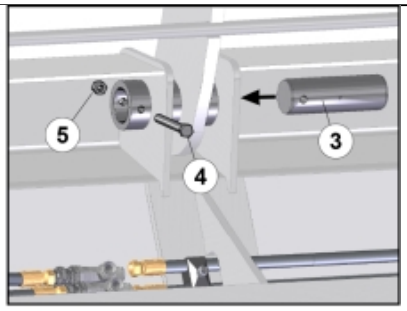

R 11254442

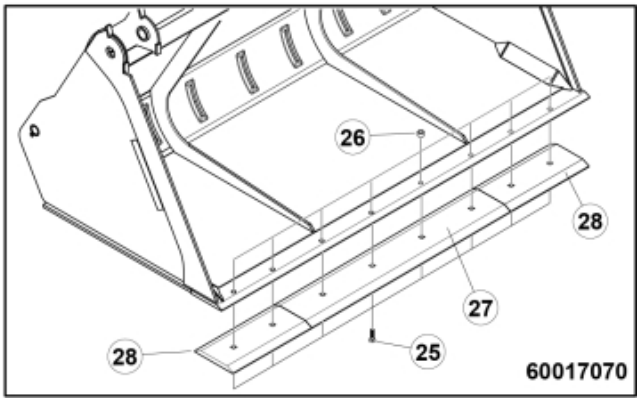

Powergrab™ XL

© 2025 Jost

Part assemblies		Powergrab XL 220		
Specification		Year From: 1/1/2017 12:00:00 AM		
PartNo	**Pos**	**Qty**	**Name**	**Specifications**
11254442			Powergrab XL 220	1/1/2017 12:00:00 AM
60017073	1	1 PCS	Bucket 220	Powergrab XL
60016512	2	2 PCS	Pin	D40 L=272
60016513	3	2 PCS	Pin	
5002991	4	4	Screw	M6S_M10x90 (8.8)
5011554	5	4	Nut	Loc-King M10
60016543	6	2 PCS	Pivot	
5215131	7	4	Locking cover	
5004917	8	4	Screw	
60016592	9	6 PCS	Bushing	
5016968	10	4	Hose clamp	
5011553	11	4	Nut	M6M M8 Loc-king
60017069	12	1 PCS	Grab head	XL 220
60019828	14	2	Pivot Pin	D=40, L=147mm
5028031	16	2	T-Adapter	
11120580	17	2	Adapter cpl.	
60014379	19	2 PCS	Cylinder	D110 Stroke 405
5023005	20	4	Greaser	M 10 x 1
60017092			Hose kit	
60016964	21	1 PCS	• Hose	L=1650
60016960	22	1 PCS	• Hose	L=1360
60016719	23	1 PCS	• Hose	L=1260
60017088	24	1 PCS	• Hose	L=960
60017070			Bolt on Cutting Edge kit	
5050650	25	10 PCS	• Plow bolt	3/4" - 2.5 inch
5050652	26	10	• Locking nut	UNC 3/4"
60017064-22	27	1 PCS	• Cutting edge	Centre
60016510-22	28	2 PCS	• Cutting edge	Outer
1123674	29	1	Warning decal	"Read manual"
1123673	30	1	Warning decal	
11137127	31	1 PCS	Decal	"Original Implements"
60016841	32	1 PCS	Decal	Powergrab XL

© 2025 Jost