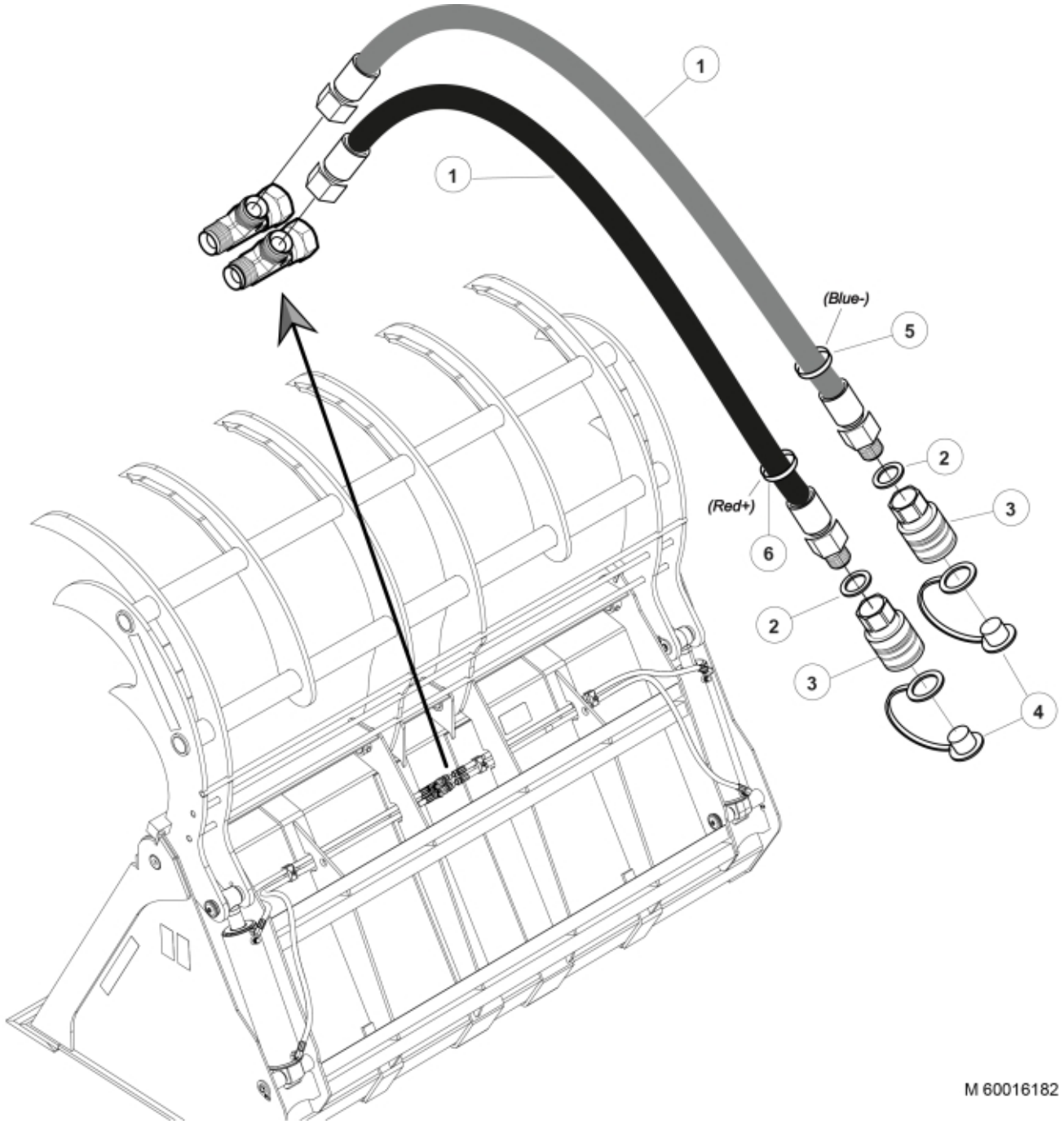

© 2025 Jost

Part assemblies Hose kit

PartNo	Pos	Qty	Name	Specifications
60016182			Hose kit	
60016181	1	2 PCS	Hose	1/2" L=900 1/2"GRLM - 1/2"GRU
5013853	2	2	Dowty washer	Tredo 1/2", Part is included in kit 60007907 Hose cpl., 9032177 Hose cpl.
5044127	3	2	Quick Coupling	1/2", Part is included in kit 60007907 Hose cpl., 9032177 Hose cpl.
5044130	4	2	Dust Cover	Part is included in kit 60007907 Hose cpl., 9032177 Hose cpl.
5022179	5	1	Cable tie	Blue
5022177	6	1	Cable tie	Red

© 2025 Jost