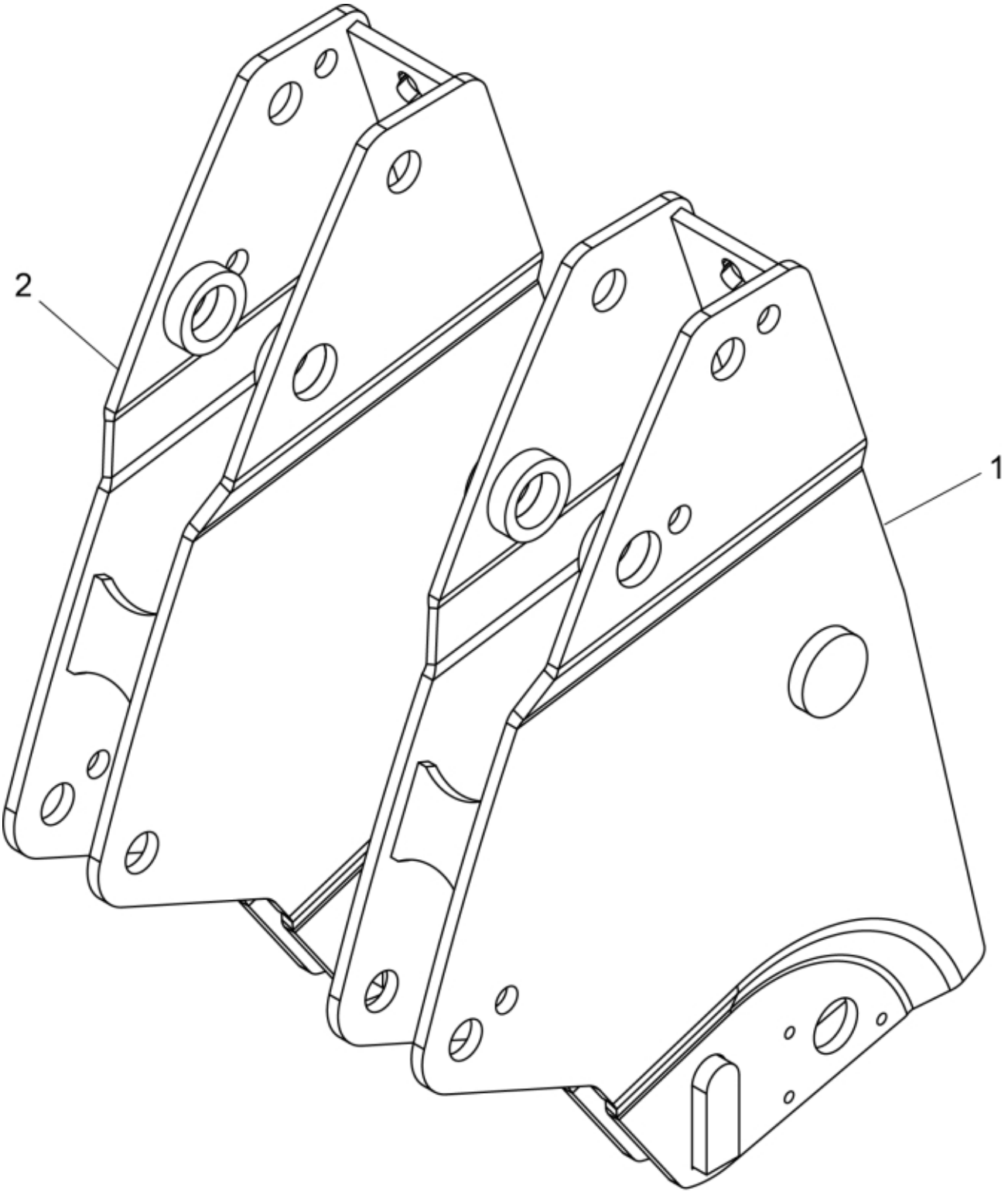

r60105470

© 2025 Jost

Description	MSL
Part assemblies	Bearing box Ext.

PartNo	Pos	Qty	Name	Specifications
60006957-1	1	1 PCS	Bearing box LH	Glossy Black
60007703-1	2	1 PCS	Bearing box RH	Glossy Black

© 2025 Jost