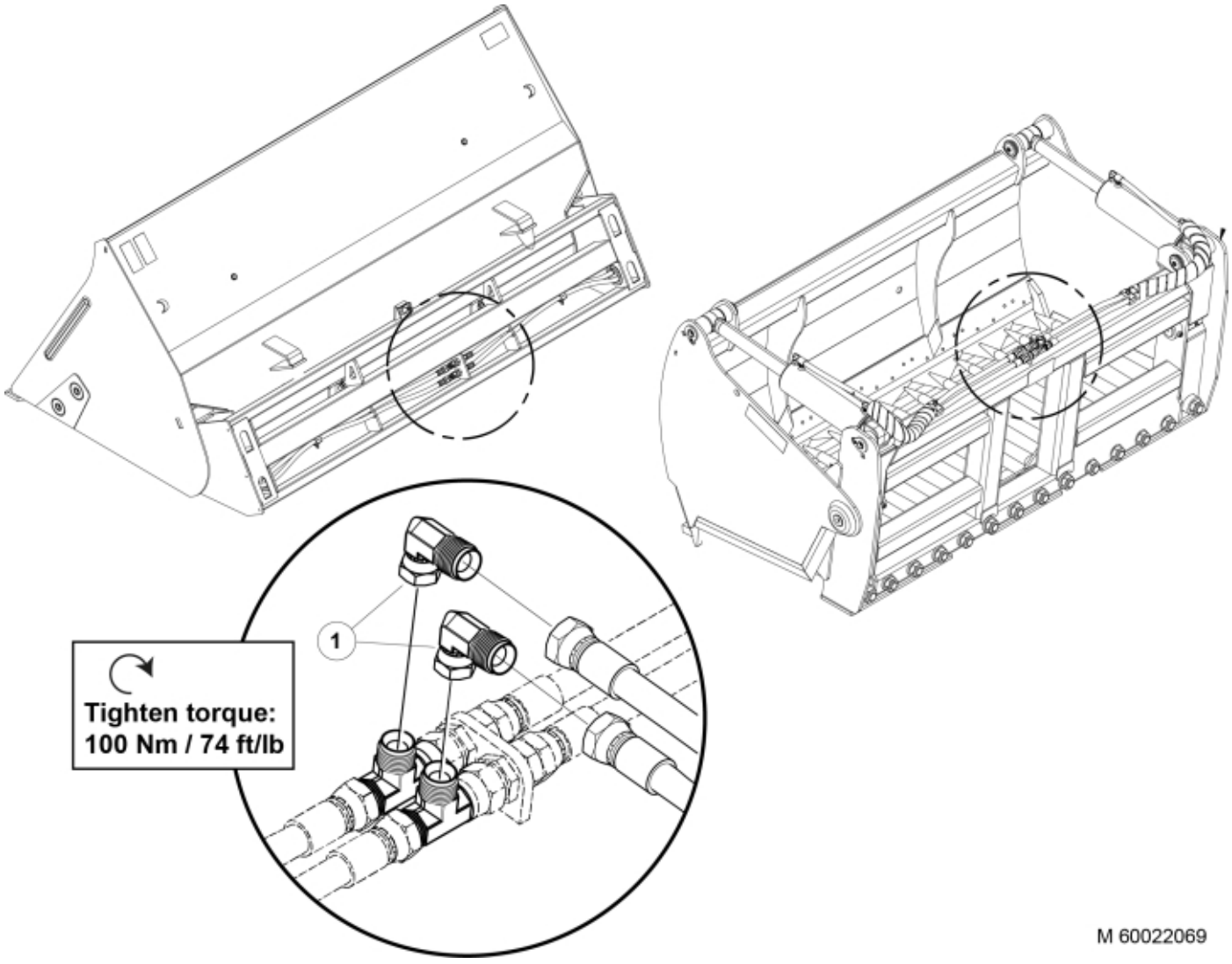

© 2025 Jost

Part assemblies Adapter kit

PartNo	Pos	Qty	Name	Specifications
60022069			Adapter kit	
5050822	1	2 PCS	Adaptor	90° BSP 1/2"-JIC 3/4"

© 2025 Jost