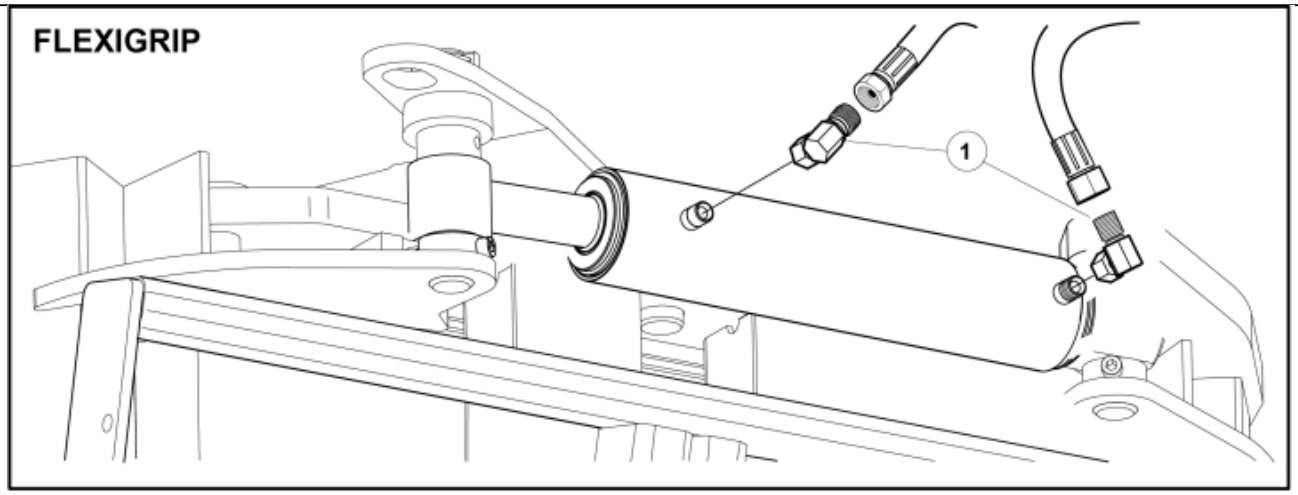

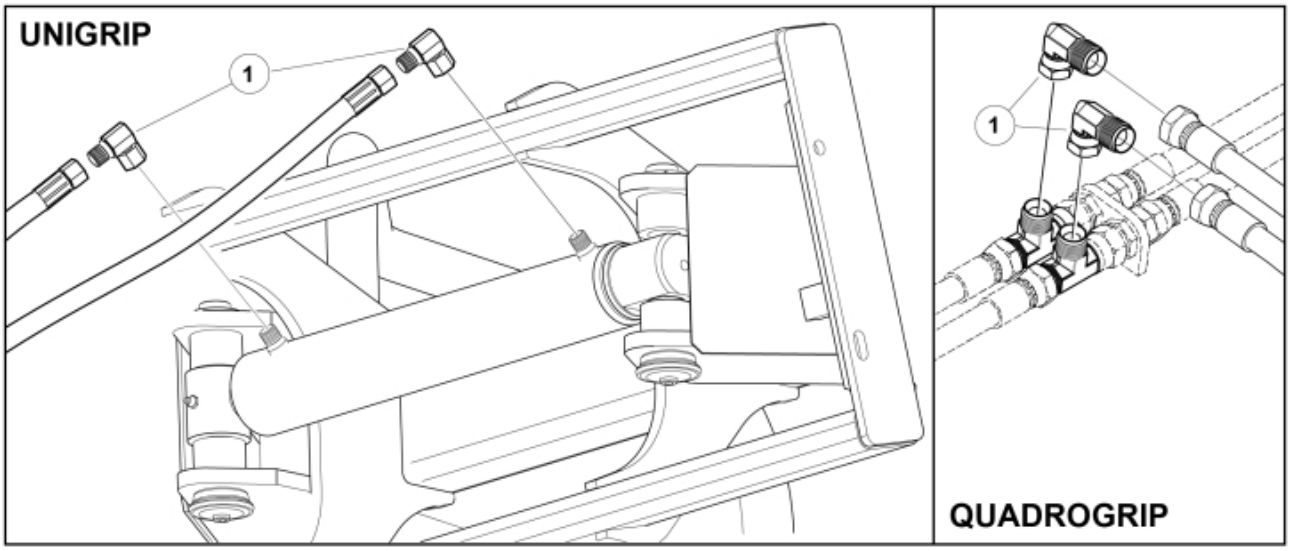

Tighten torque:
70 Nm / 52 ft/lb

M 60022070

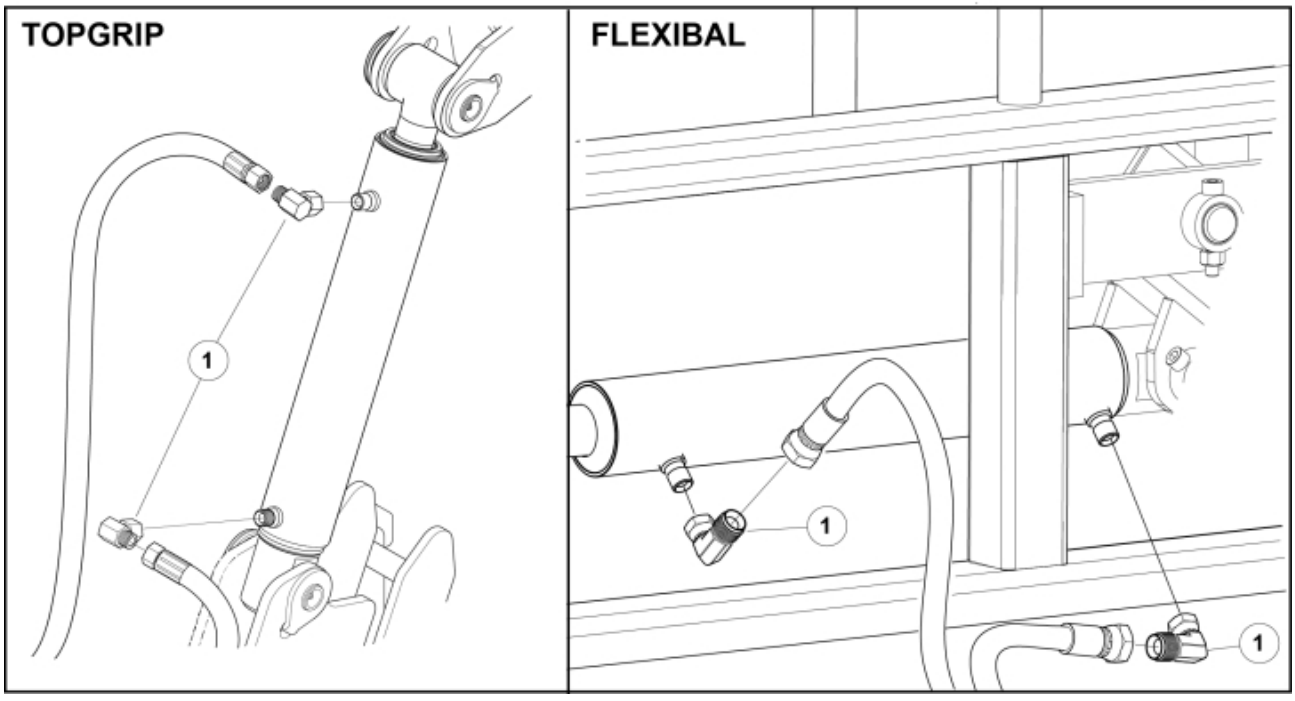

© 2025 Jost

Part assemblies Adapter kit

PartNo	Pos	Qty	Name	Specifications
60022070			Adapter kit	
5050821	1	2 PCS	Adaptor	90° BSP 3/8" - JIC 9/16"

© 2025 Jost