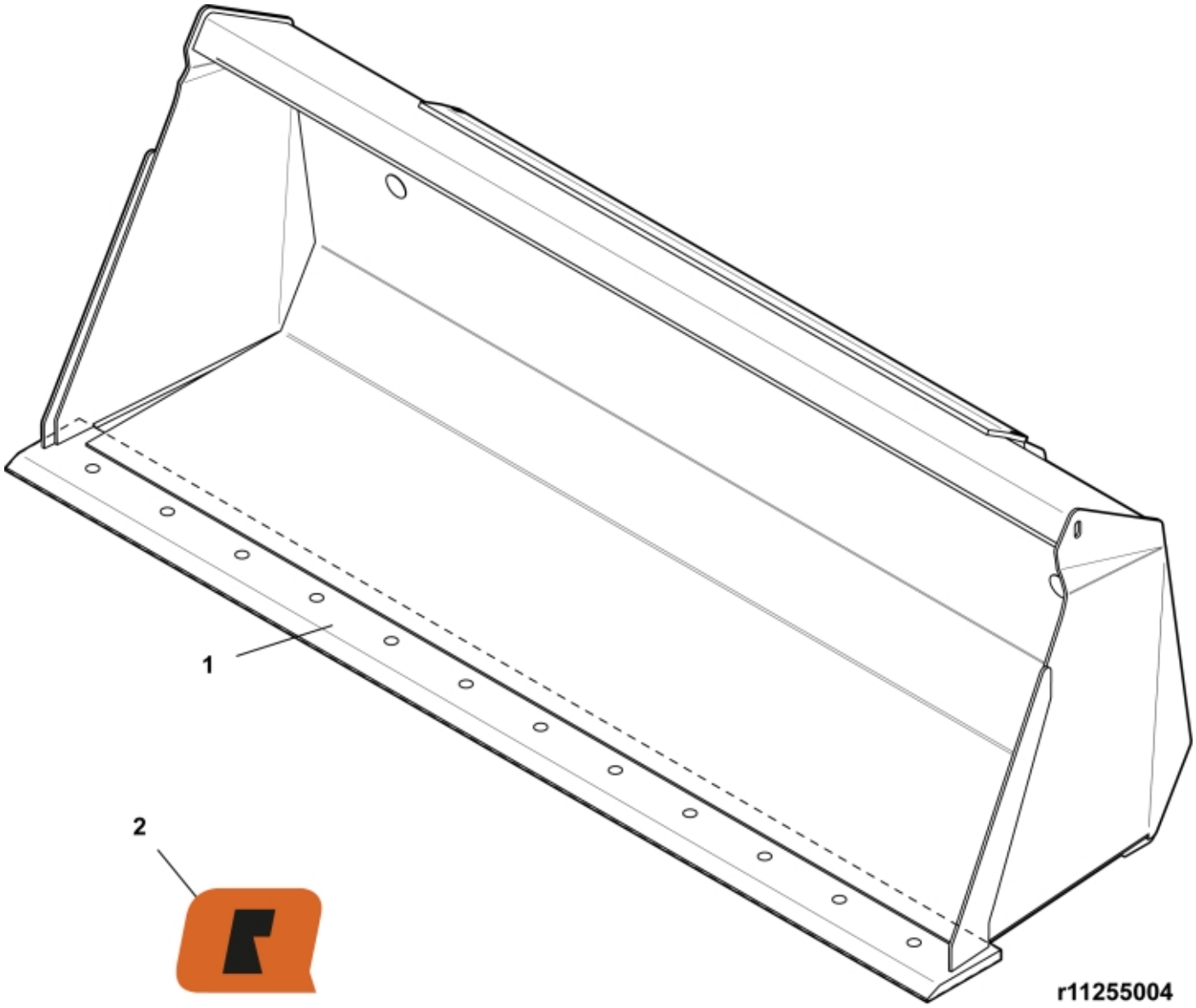

© 2025 Jost

Part assemblies	CV Bucket 72" SkidSteer
Specification	Year From: 5/1/2018 12:00:00 AM

PartNo	Pos	Qty	Name	Specifications
60007014	1	1 PCS	Cutting edge	L=1880 mm
60049053	2	2	Decal	"Q" small 80x57
5022119		2	Plug	

© 2025 Jost