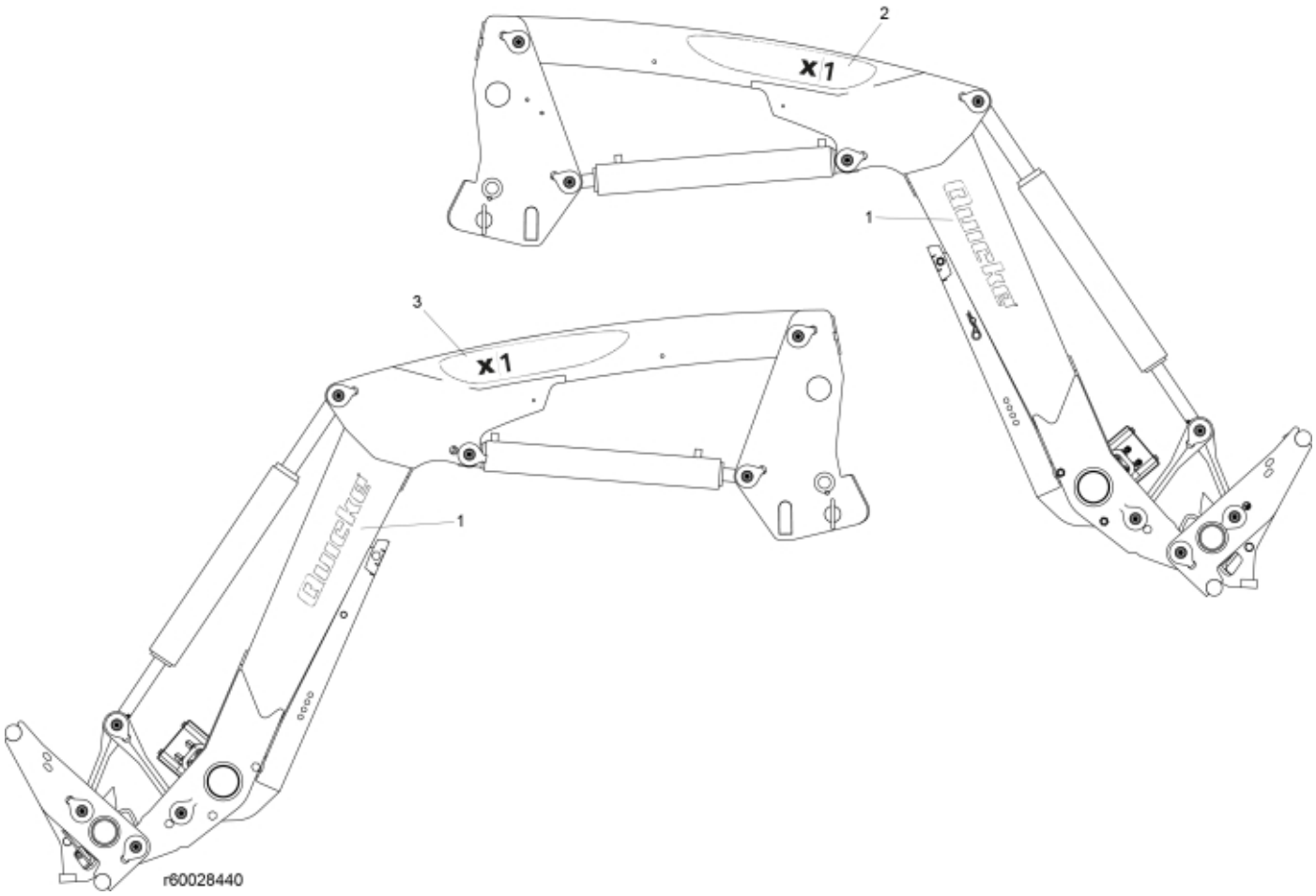

© 2025 Jost

Description	X1
Part assemblies	Decals

PartNo	Pos	Qty	Name	Specifications
60028480	1	2 PCS	Decal, Brand	
60028455	2	1 PCS	Decal Model, RH	X1
60028454	3	1 PCS	Decal Model, LH	X1

© 2025 Jost