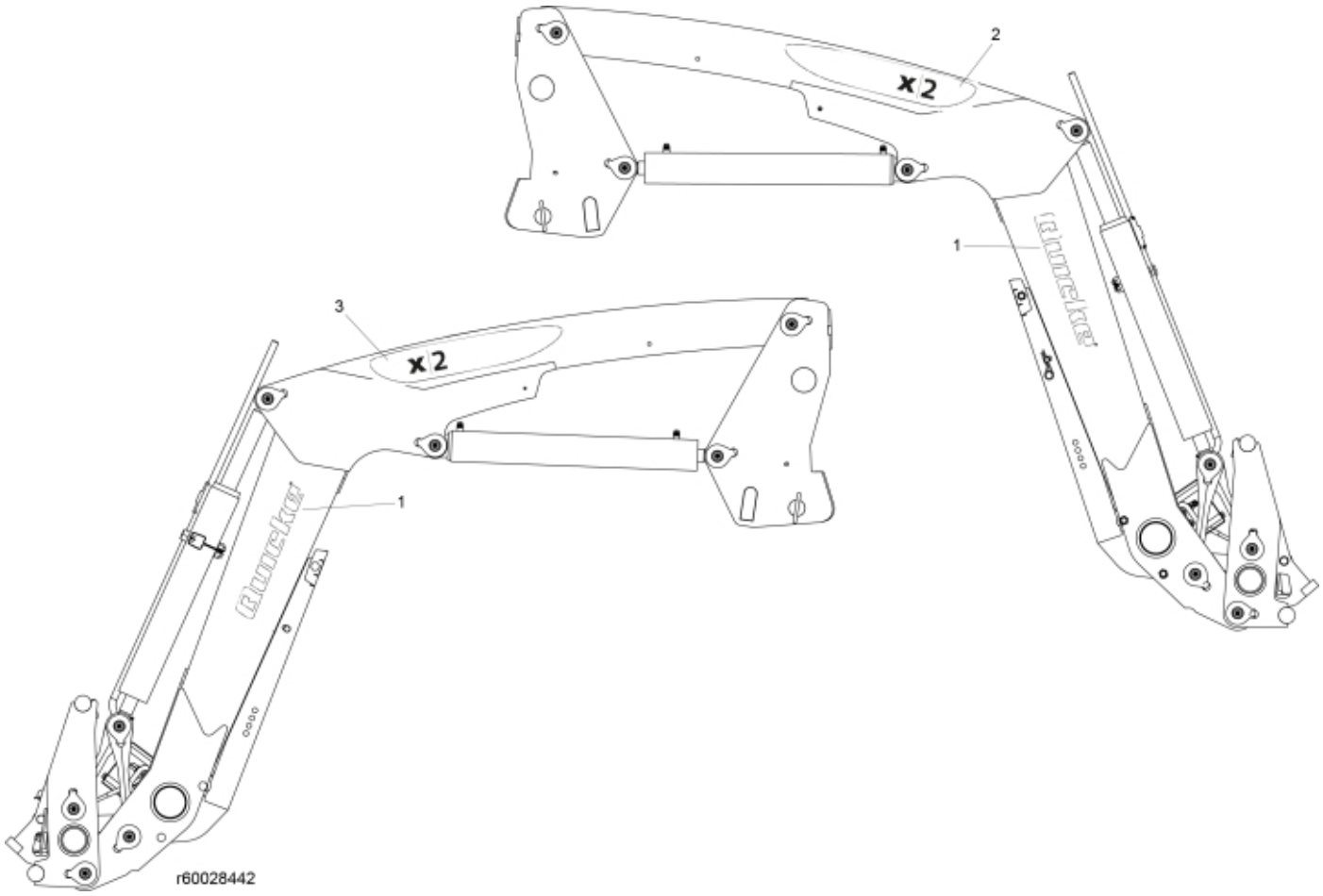

© 2025 Jost

Description	X2
Part assemblies	Decals

PartNo	Pos	Qty	Name	Specifications
60028480	1	2 PCS	Decal, Brand	
60028459	2	1 PCS	Decal Model, RH	X2
60028458	3	1 PCS	Decal Model, LH	X2

© 2025 Jost