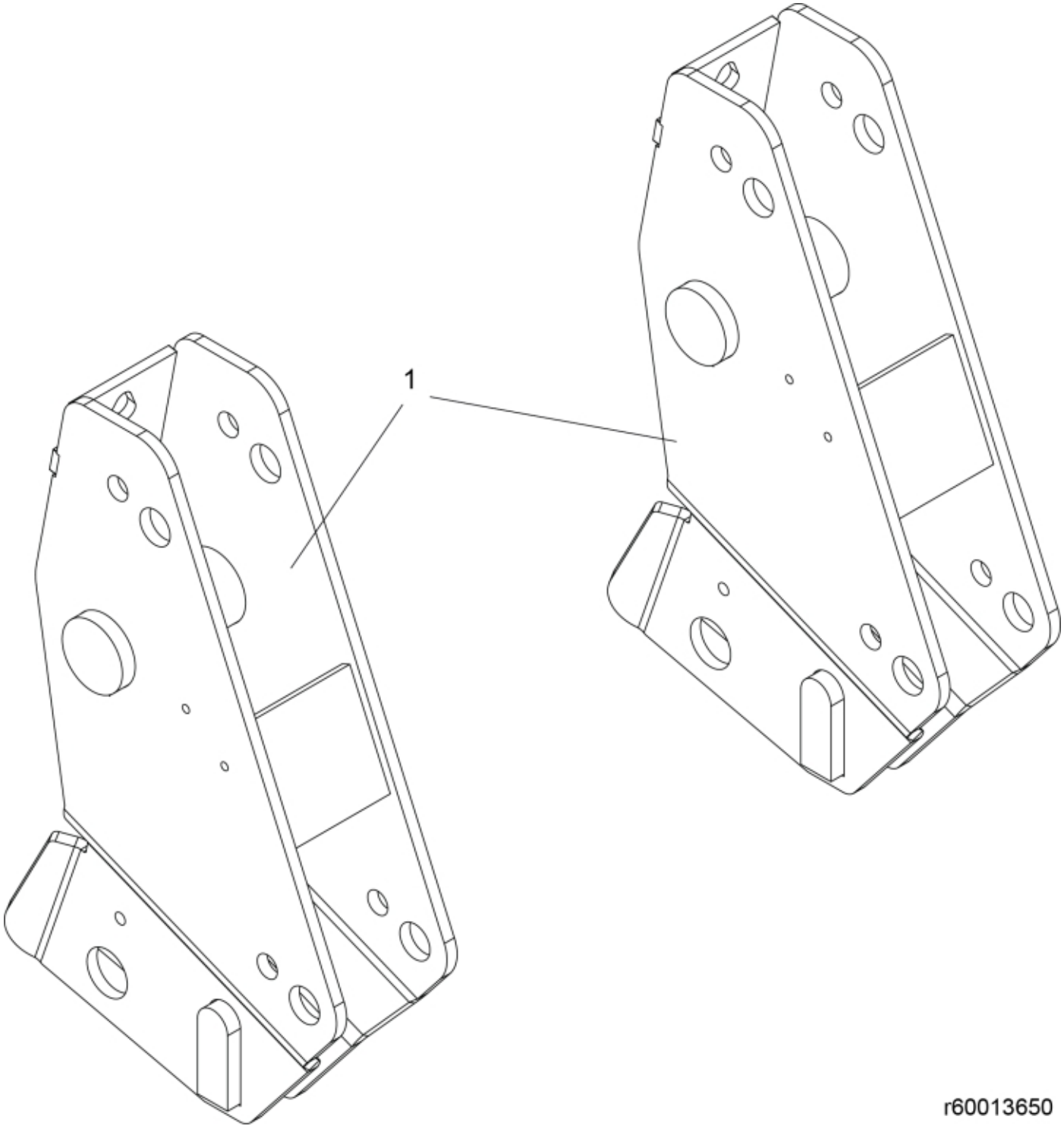

© 2025 Jost

Part assemblies	Bearing box DM

PartNo	Pos	Qty	Name	Specifications
60013632-17	1	2	Bearing box	Black Texture

© 2025 Jost