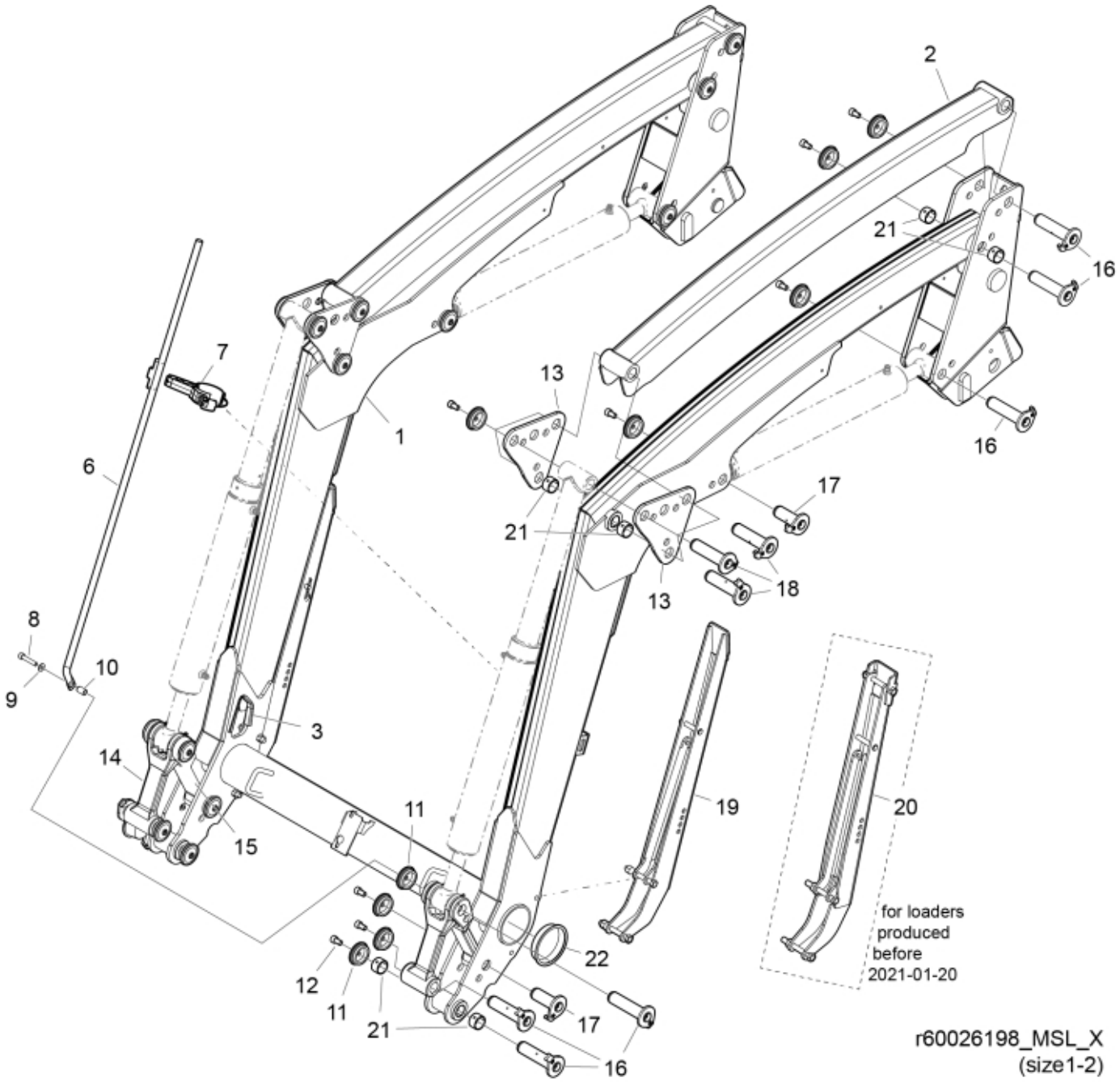
2
21
16
7
13
1
16
6
17
21
18
13
8
10
9
3
14
11
19
20
15
for loaders
produced
before
2021-01-20
22
12
11
21
17
16
r60026198_MSL_X
(size1-2)


© 2025 Jost

| | |
|---|---|
| **Description** | X-series |
| **Part assemblies** | Loader beam |

| PartNo | Pos | Qty | Name | Specifications |
|---|---|---|---|---|
| 60057376-17 | 1 | 1 | Loader beam | Black Texture. Replaces 5222075-17. |
| 5222135-17 | 2 | 2 | Parallel rod | Black Texture |
| 5221974 | 3 | 2 | Edge cover | |
| 5215219 | 6 | 1 | Indicator rod | |
| 5215208 | 7 | 1 | Holder kit | |
| 5050605 | 8 | 1 | Screw | MC6S 10x50 Loc |
| 5013110 | 9 | 1 | Washer | BRB 10.5x22x2 |
| 5215227 | 10 | 1 | Spacer | |
| 5215131 | 11 | 22 | Locking cover | |
| 5050608 | 12 | 21 | Screw | MC6S M10x20 Loc |
| 5221973-17 | 13 | 4 | Link | Black Texture |
| 5221361-1 | 14 | 2 | Link | Glossy Black |
| 5221365-1 | 15 | 2 | Link | Glossy Black |
| 60018046 | 16 | 12 | Pivot Pin | D=30, L=127mm |
| 60018050 | 17 | 4 | Pivot Pin | D=30, L=84mm |
| 9020100 | 18 | 6 | Pivot Pin | D=30, L=122mm |
| 60058243-17 | 19 | 2 | Support leg | Black Texture For loaders produced from 2021/01/20 |
| 5221342-17 | 20 | 2 | Support leg | Black Texture, 1/19/2021 12:00:00 AM For loaders produced until 2021/01/19 |
| 5018515 | 21 | 12 | Bushing | D30 L=20 |
| 5221165 | 22 | 2 | Plastic cover | |


© 2025 Jost