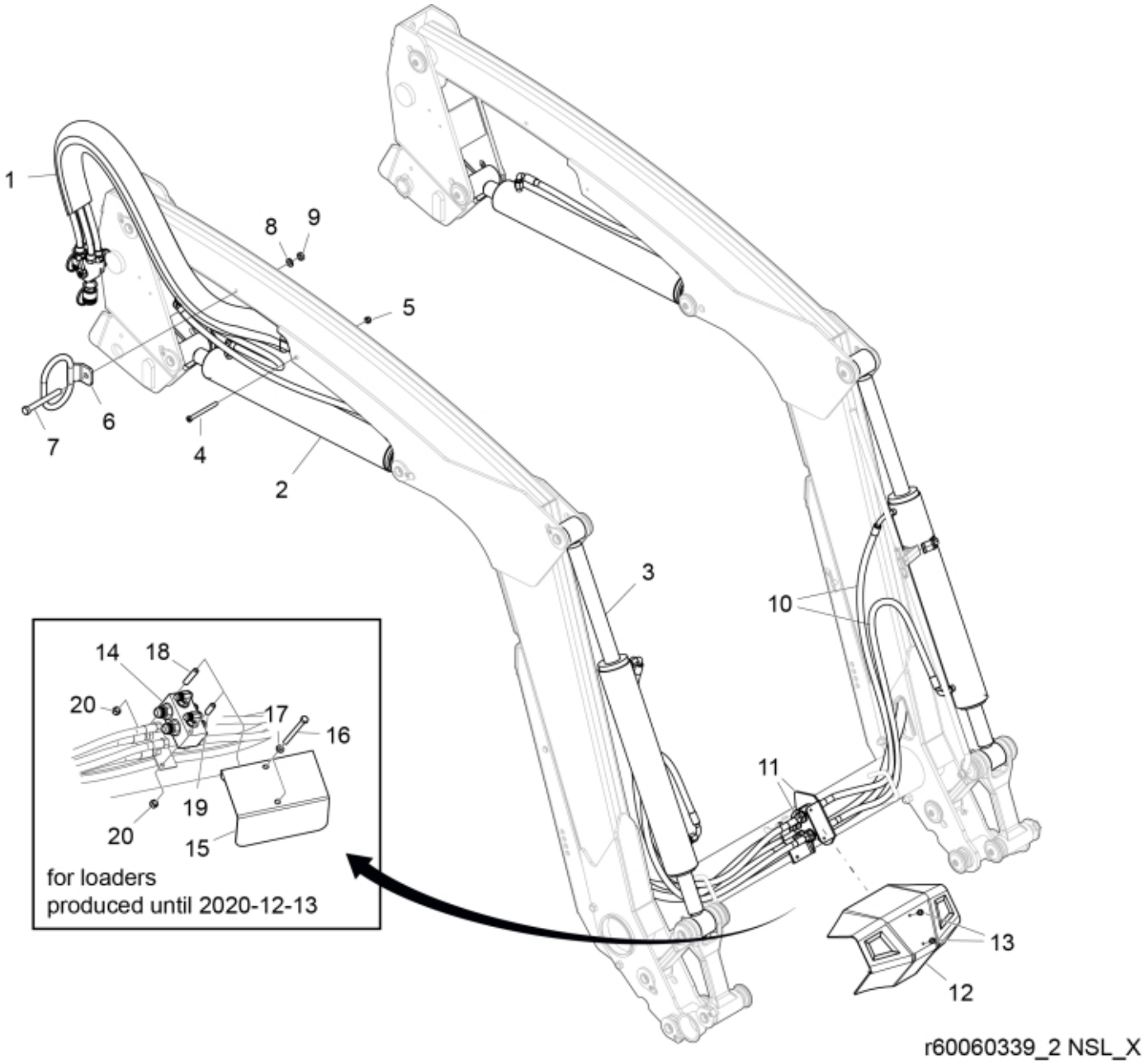
1
8
9
5
6
7
4
2
3
10
11
13
12
14
18
20
17
16
19
20
15
for loaders
produced until 2020-12-13
r60060339_2 NSL_X

© 2025 Jost

Description	X-series
Part assemblies	Hydraulics

PartNo	Pos	Qty	Name	Specifications
- - -	1	1	Main hose kit	See separate part list
60048010-1	2	2 PCS	Lift Cylinder	Glossy Black. Replaces 60009661-1
60048001-1	3	2 PCS	Tilt Cylinder	Glossy Black S/N 101201200381 -
12729210-1	3	2 PCS	Tilt Cylinder	Glossy Black S/N - 101201200380
5004955	4	1	Screw	MC6S 6x85
5011552	5	1	Locking nut	M6 Locking
5221966	6	1	Hose guide	
5002064	7	1	Screw	M6S 8x80
5013101	8	1	Washer	BRB 8,4 x 16
5011553	9	1	Nut	M6M M8 Loc-king
9031723	10	4	Hose	3/8"
4501184	11	1	CVU Basic NSL	12/14/2020 12:00:00 AM For loaders produced from 2020/12/14
60057476	12	1	Plastic cover	For loaders produced from 2020/12/14
5051982	13	1	Screw	M6x8 For loaders produced from 2020/12/14
10550412	14	1 PCS	Distribution block cpl.	For loaders produced until 2020/12/13
60009959	15	1	Protection plate	replaces 5221561 For loaders produced until 2020/12/13
5002978	16	2	Screw	M6S 8x129 For loaders produced until 2020/12/13
5013101	17	2	Washer	BRB 8,4 x 16 For loaders produced until 2020/12/13
5221562	18	1 PCS	Spacer	For loaders produced until 2020/12/13
5221563	19	1 PCS	Spacer	For loaders produced until 2020/12/13
5011921	20	2	Nut	M6MF M8 For loaders produced until 2020/12/13

© 2025 Jost