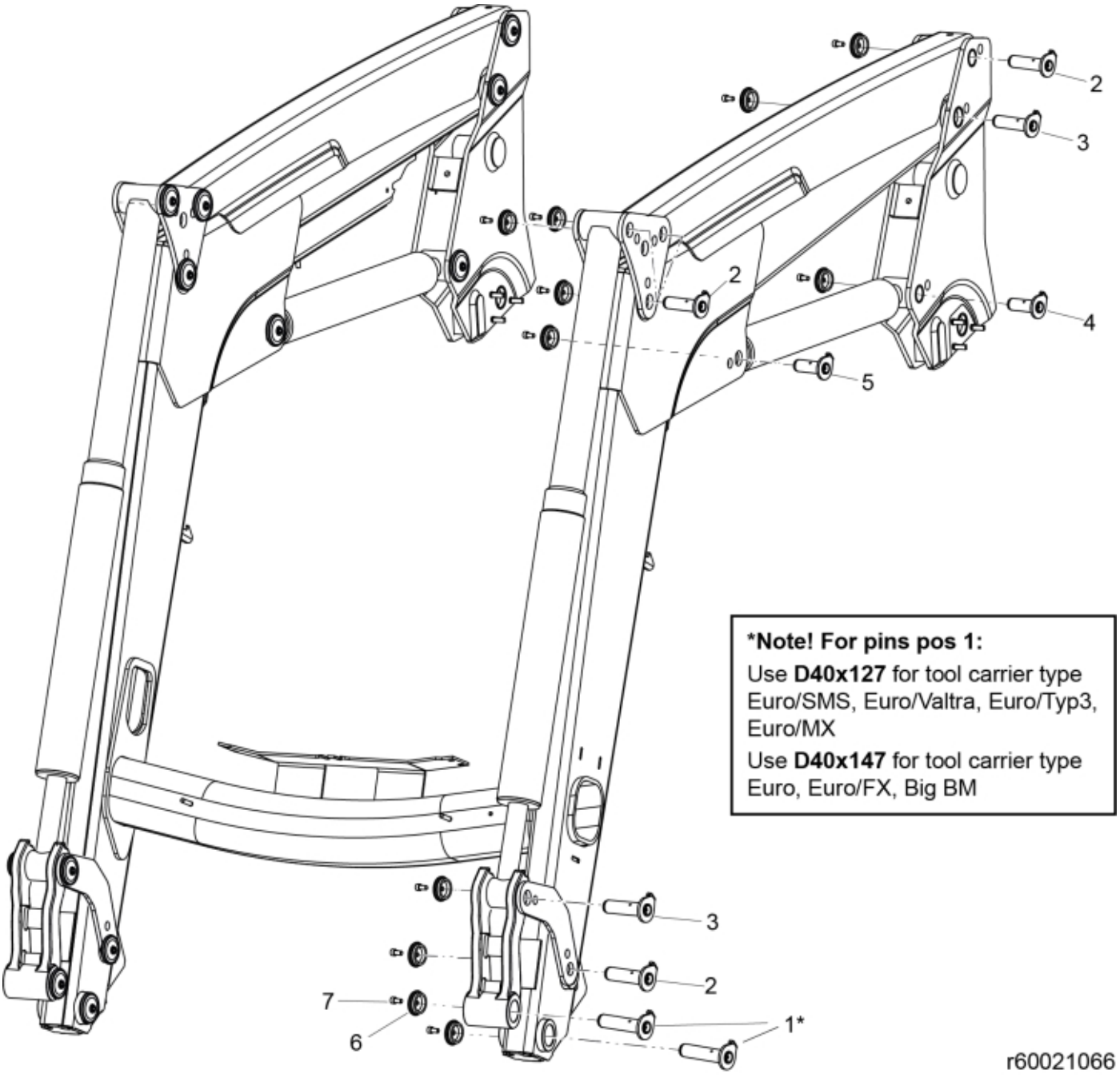
2
3
2
4
5
3
2
7
6
1*
*Note! For pins pos 1:
Use D40x127 for tool carrier type Euro/SMS, Euro/Valtra, Euro/Typ3, Euro/MX
Use D40x147 for tool carrier type Euro, Euro/FX, Big BM
r60021066

© 2025 Jost

Part assemblies		Pin kit		
Specification		Specification: Replaces 9020070		
PartNo	**Pos**	**Qty**	**Name**	**Specifications**
60021066		1 PCS	Pin kit	Replaces 9020070
60019828	1	4	Pivot Pin	D=40, L=147mm
60018062	1	4	Pivot Pin	D=40, L=127mm
60018053	2	10	Pivot Pin	D=35, L=127mm
60018062	3	4	Pivot Pin	D=40, L=127mm
60018058	4	2	Pivot Pin	D=35, L=96mm
60018059	5	2	Pivot Pin	D=35, L84mm
5215131	6	22	Locking cover	
5050608	7	22	Screw	MC6S M10x20 Loc

© 2025 Jost