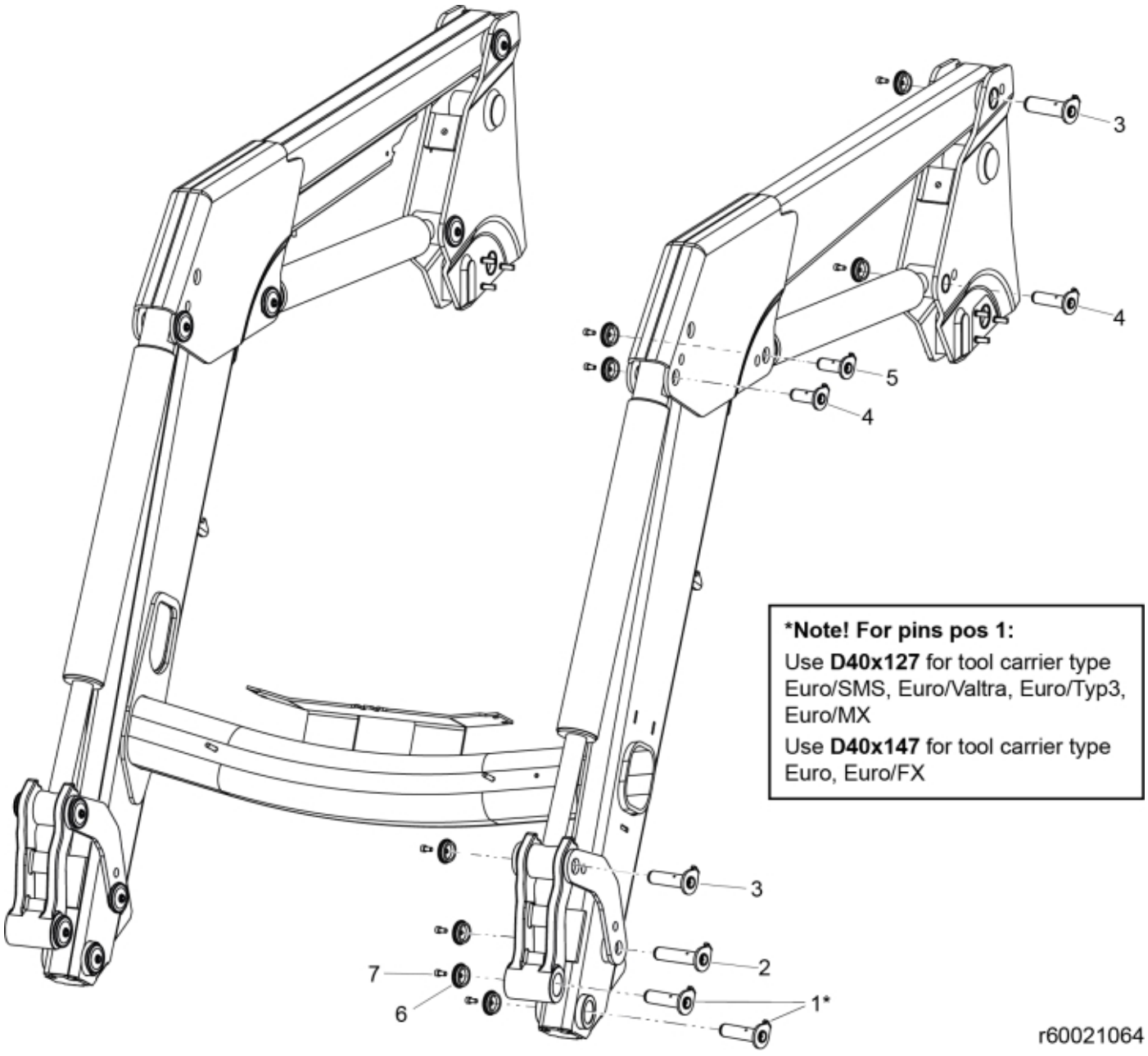

***Note! For pins pos 1:**

Use **D40x127** for tool carrier type Euro/SMS, Euro/Valtra, Euro/Typ3, Euro/MX

Use **D40x147** for tool carrier type Euro, Euro/FX

© 2025 Jost

Part assemblies Specification		Pin kit Specification: Replaces 9020068		
PartNo	**Pos**	**Qty**	**Name**	**Specifications**
60021064		1 PCS	Pin kit	Replaces 9020068
60019828	1	4	• Pivot Pin	D=40, L=147mm
60018062	1	4	• Pivot Pin	D=40, L=127mm
60018053	2	2	• Pivot Pin	D=35, L=127mm
60018062	3	4	• Pivot Pin	D=40, L=127mm
60018058	4	4	• Pivot Pin	D=35, L=96mm
60018059	5	2	• Pivot Pin	D=35, L84mm
5215131	6	16	• Locking cover	
5050608	7	16	• Screw	MC6S M10x20 Loc

© 2025 Jost