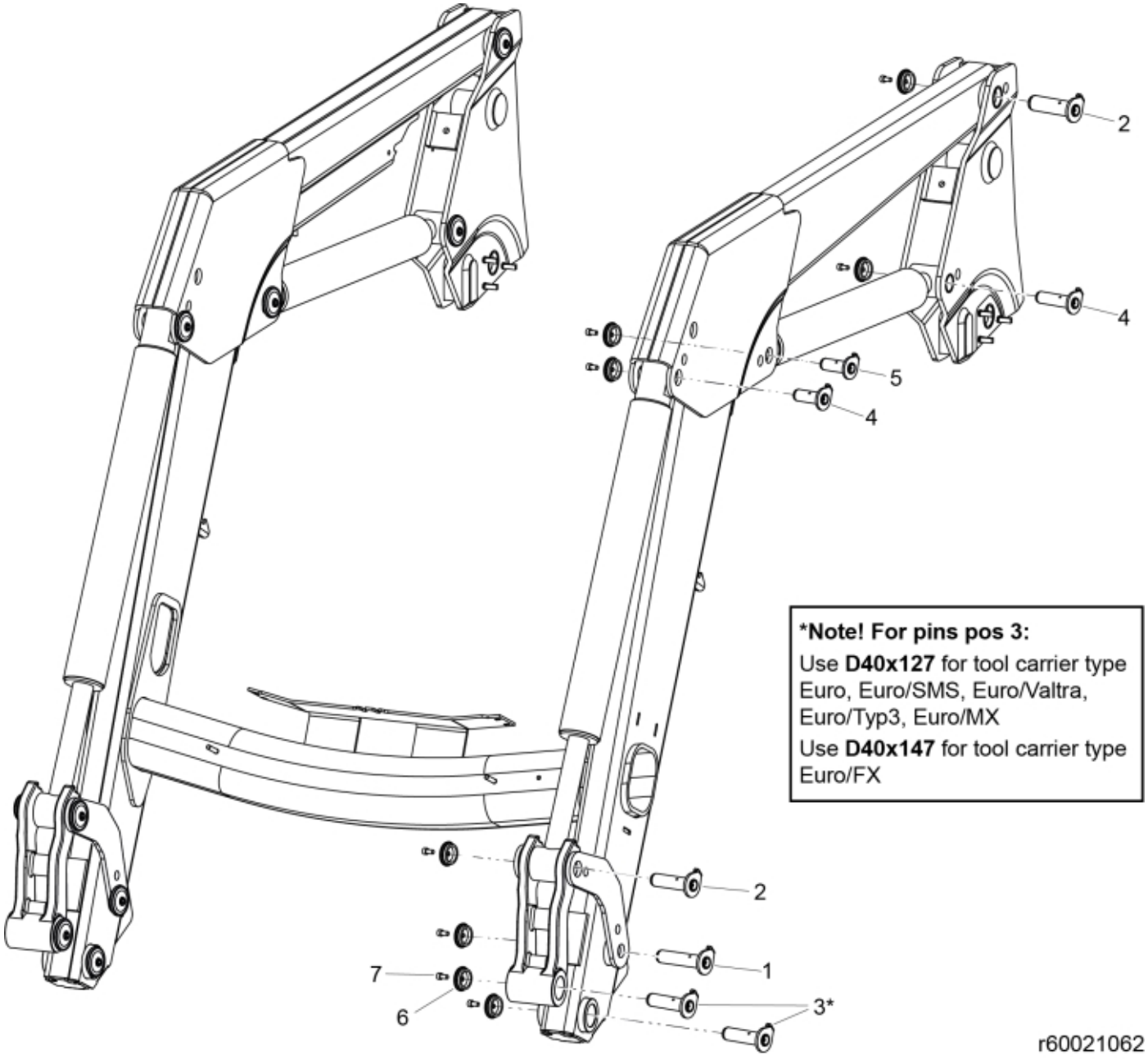
2
4
5
4
2
1
7
6
3*
*Note! For pins pos 3:
Use D40x127 for tool carrier type Euro, Euro/SMS, Euro/Valtra, Euro/Typ3, Euro/MX
Use D40x147 for tool carrier type Euro/FX
r60021062

© 2025 Jost

Part assemblies Specification		Pin kit Specification: Replaces 9020067		
PartNo	**Pos**	**Qty**	**Name**	**Specifications**
60021062			Pin kit	Replaces 9020067
60018046	1	2	• Pivot Pin	D=30, L=127mm
60018053	2	4	• Pivot Pin	D=35, L=127mm
60018062	3	4	• Pivot Pin	D=40, L=127mm
60019828	3	4	Pivot Pin	D=40, L=147mm
60018047	4	4	• Pivot Pin	D=30, L=96mm
60018050	5	2	• Pivot Pin	D=30, L=84mm
5215131	6	16	• Locking cover	
5050608	7	16	• Screw	MC6S M10x20 Loc

© 2025 Jost