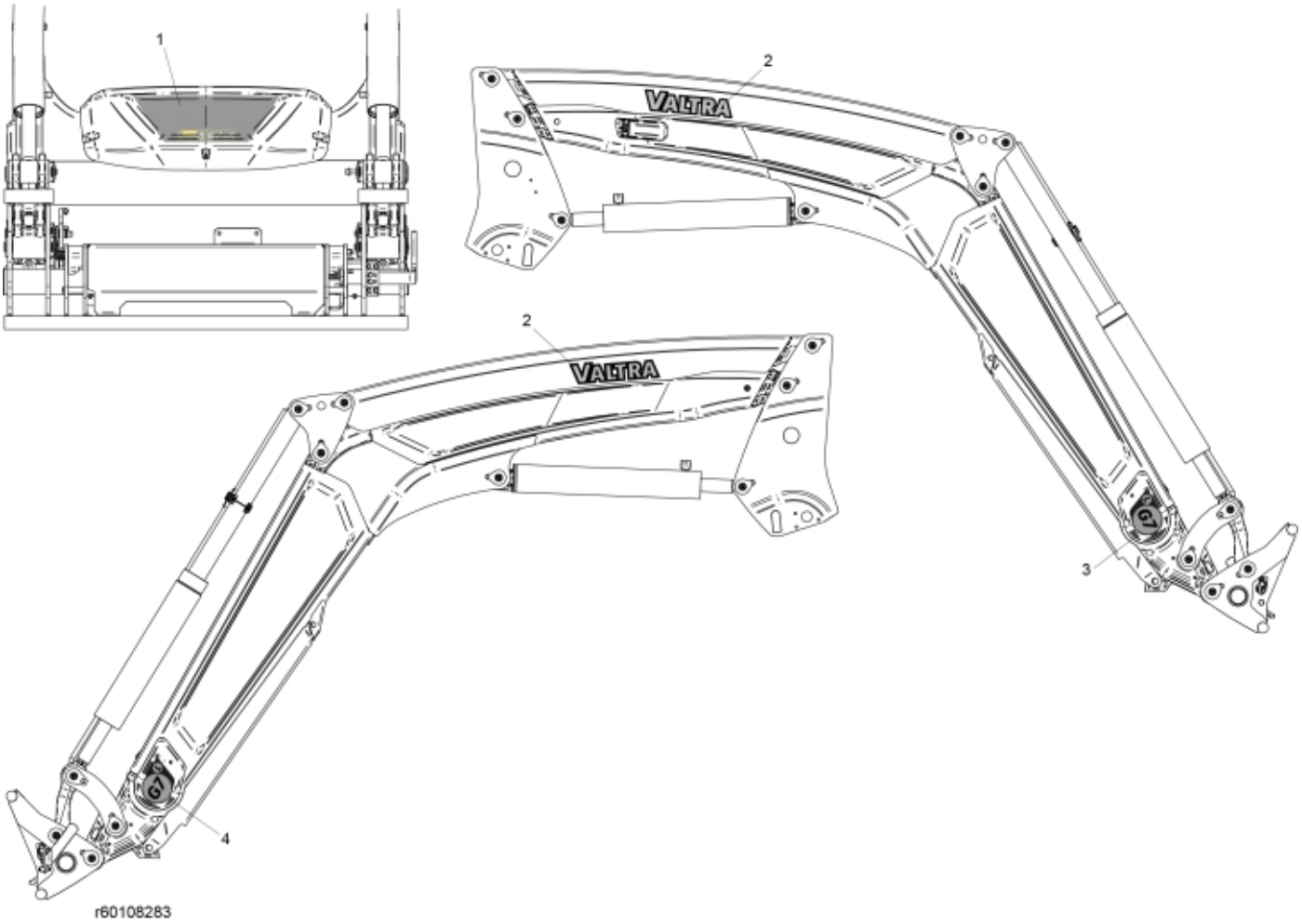

© 2025 Jost

Description	G7L
Part assemblies	Decals

PartNo	Pos	Qty	Name	Specifications
60108090	1	1	Decal	Centre Cover
11133937	2	2	Decal, Brand	
60108285	3	1 PCS	Decal Model, RH	G7L
60108284	4	1 PCS	Decal Model, LH	G7L

© 2025 Jost