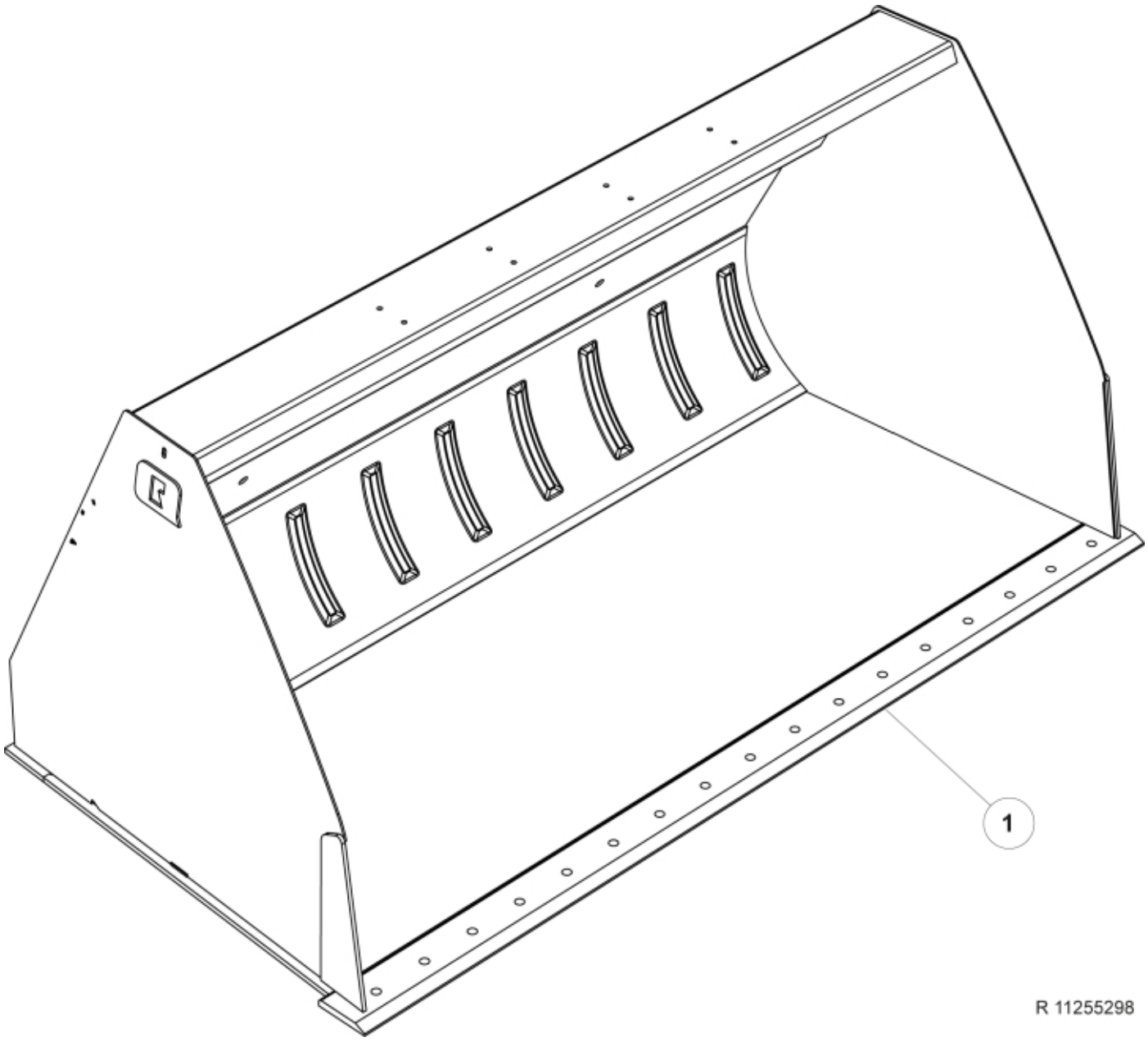

© 2025 Jost

Part assemblies	XV Bucket 260
Specification	Year From: 8/1/2018 12:00:00 AM
	Year To: 5/31/2020 12:00:00 AM

PartNo	Pos	Qty	Name	Specifications
11255298		1	XV Bucket 260	8/1/2018 12:00:00 AM, 5/31/2020 12:00:00 AM
60028887	1	1 PCS	Cutting edge	L=2600 mm
5022119		2	Plug	

© 2025 Jost