M 60016633

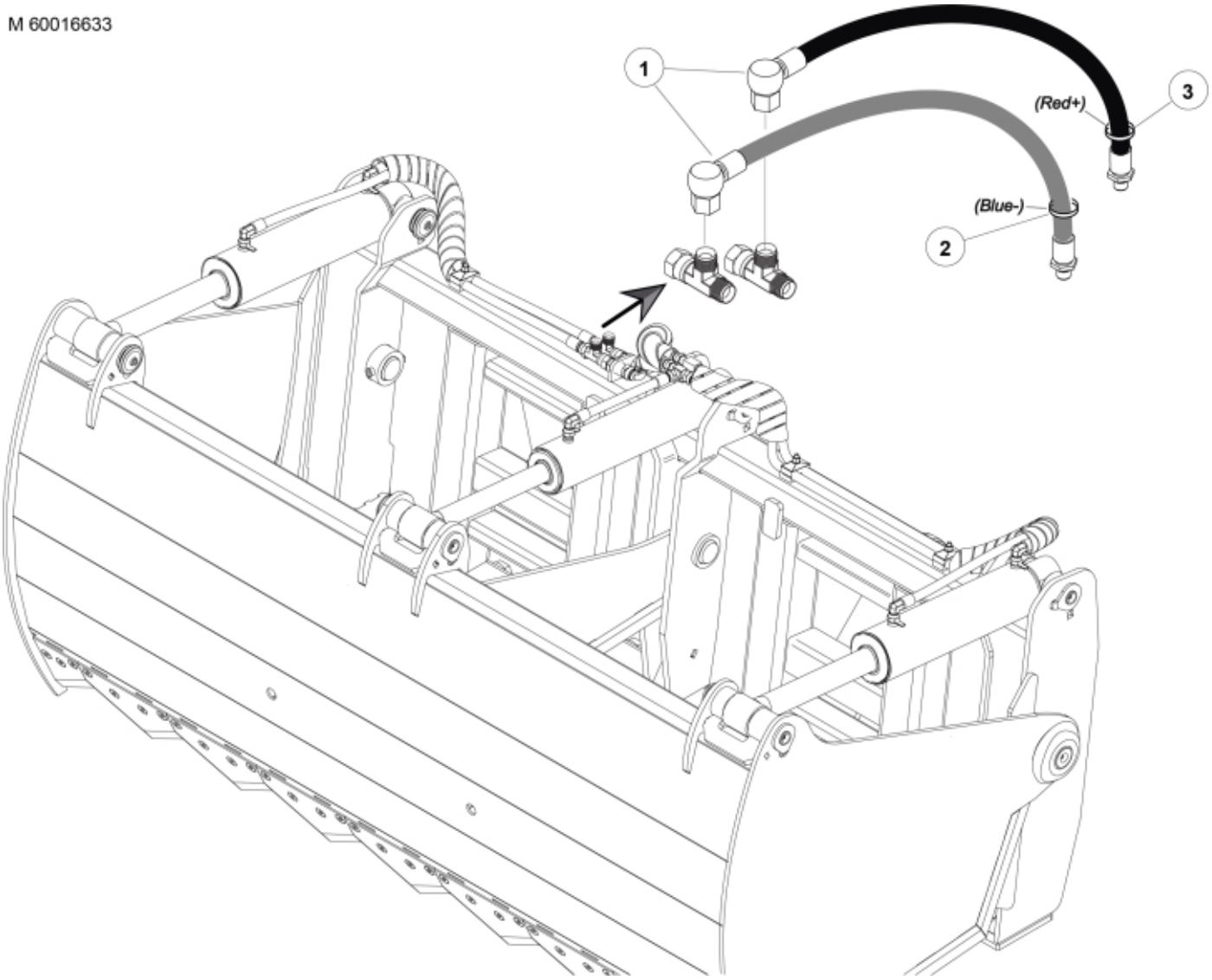

© 2025 Jost

Part assemblies	Hose kit MX
Specification	Specification: 1/2" MX

PartNo	Pos	Qty	Name	Specifications
60016633		1 PCS	Hose kit MX	1/2" MX
60016639	1	2 PCS	• Hose	1/2" L=750 1/2"G90LMC - M22x1,5MLRLM
5022179	2	1	• Cable tie	Blue
5022177	3	1	• Cable tie	Red

© 2025 Jost