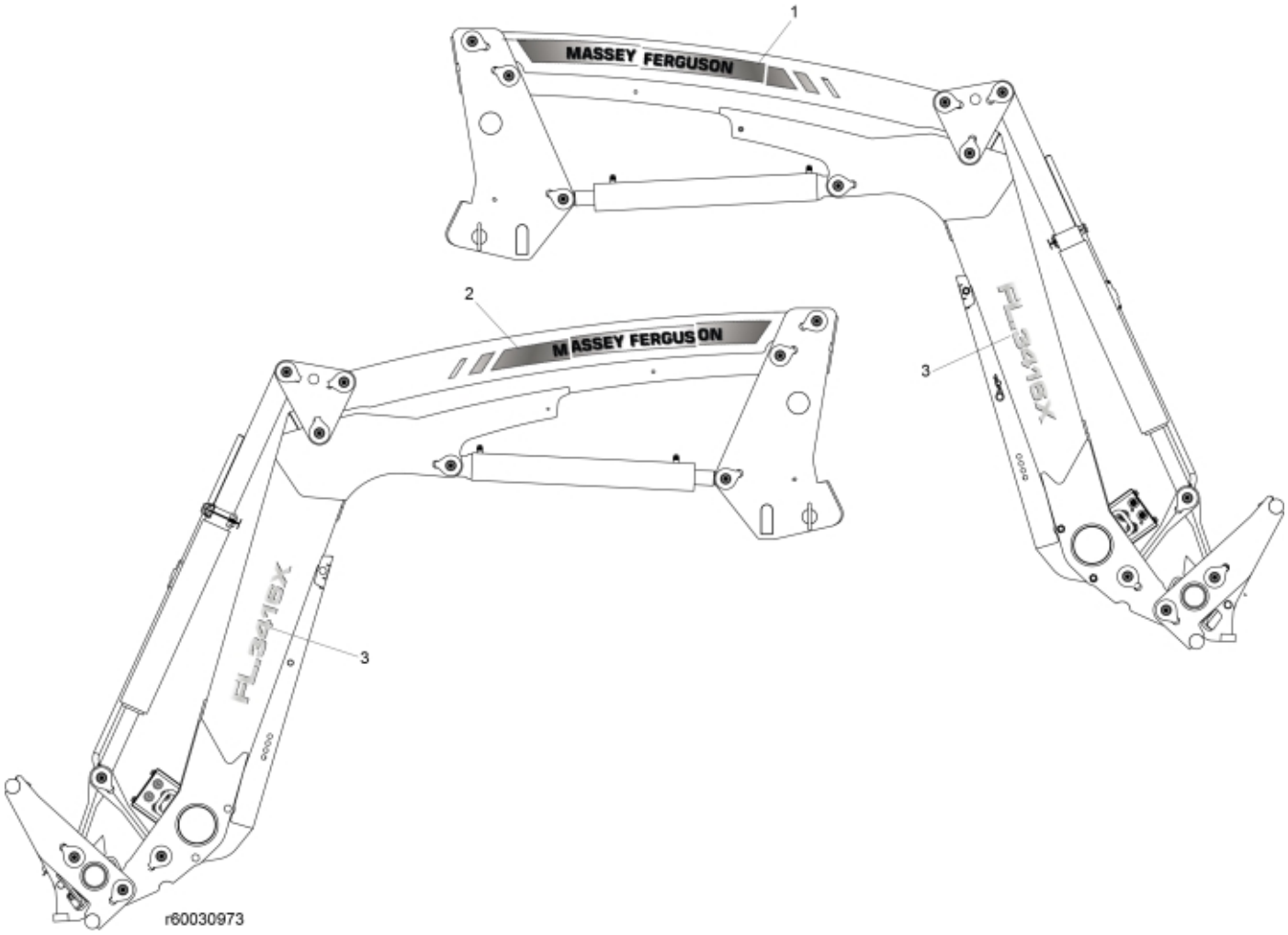
1
MASSEY FERGUSON
2
MASSEY FERGUSON
3
FL341BX
3
FL341BX
r60030973

© 2025 Jost

Description	FL3416X
Part assemblies	Decals
Specification	Year To: 8/31/2024 12:00:00 AM

PartNo	Pos	Qty	Name	Specifications
11137078	1	1 PCS	Decal Brand, RH	
11137076	2	1 PCS	Decal Brand, LH	
60030696	3	2 PCS	Decal, Model	FL3416X

© 2025 Jost