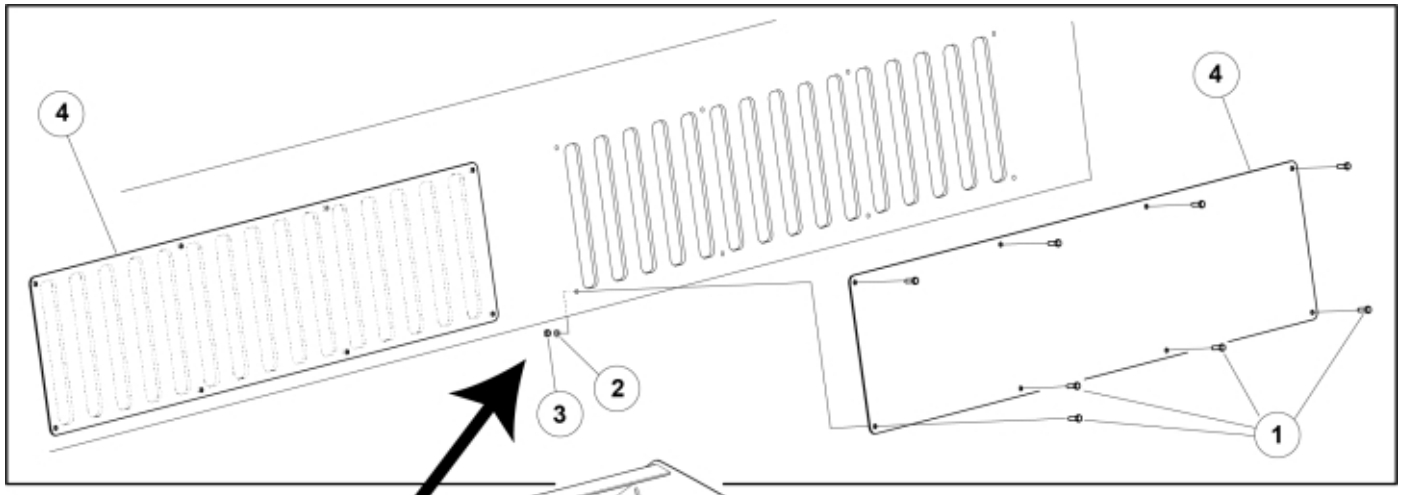

M 60031115
M 60031116

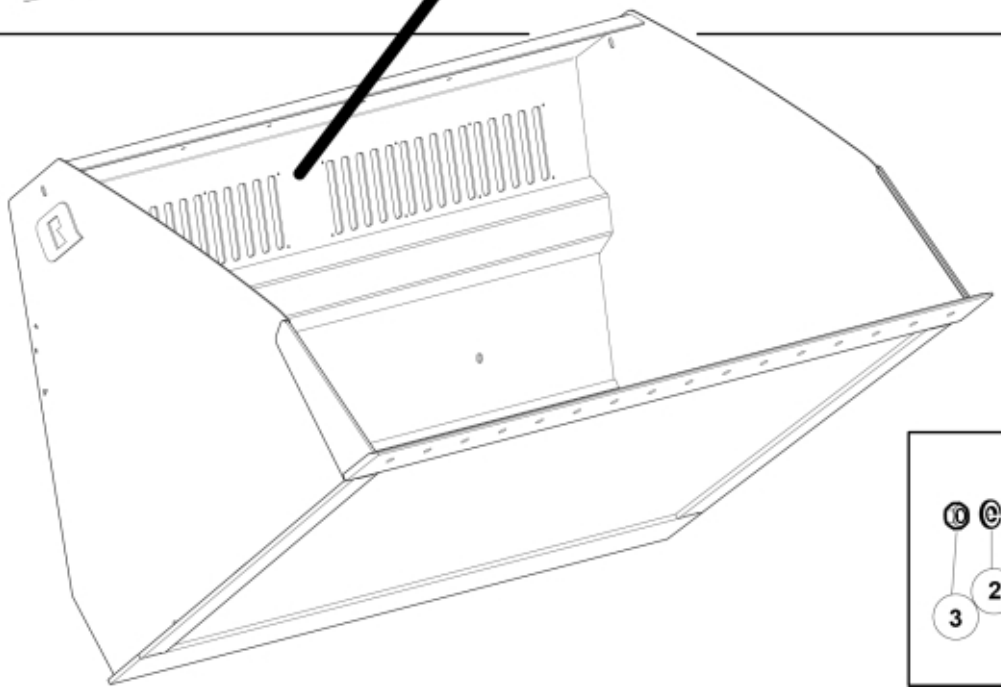

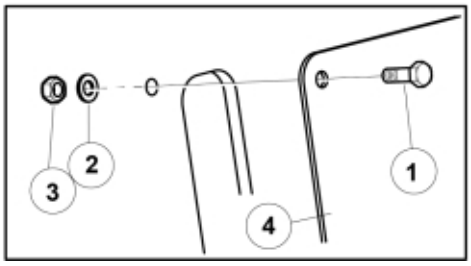

© 2025 Jost

Description	280-300
Part assemblies	Cover kit
Specification	Specification: 280, 300
	Year To: 6/1/2026 12:00:00 AM

PartNo	Pos	Qty	Name	Specifications
60031116		1 PCS	Cover kit	280, 300, 6/1/2026 12:00:00 AM
	1	16 PCS	Screw	M6S M5X16
	2	16	Washer	5,3x10x1,5
	3	16	Nut	M6M 5
	4	2 PCS	Cover plate	

© 2025 Jost