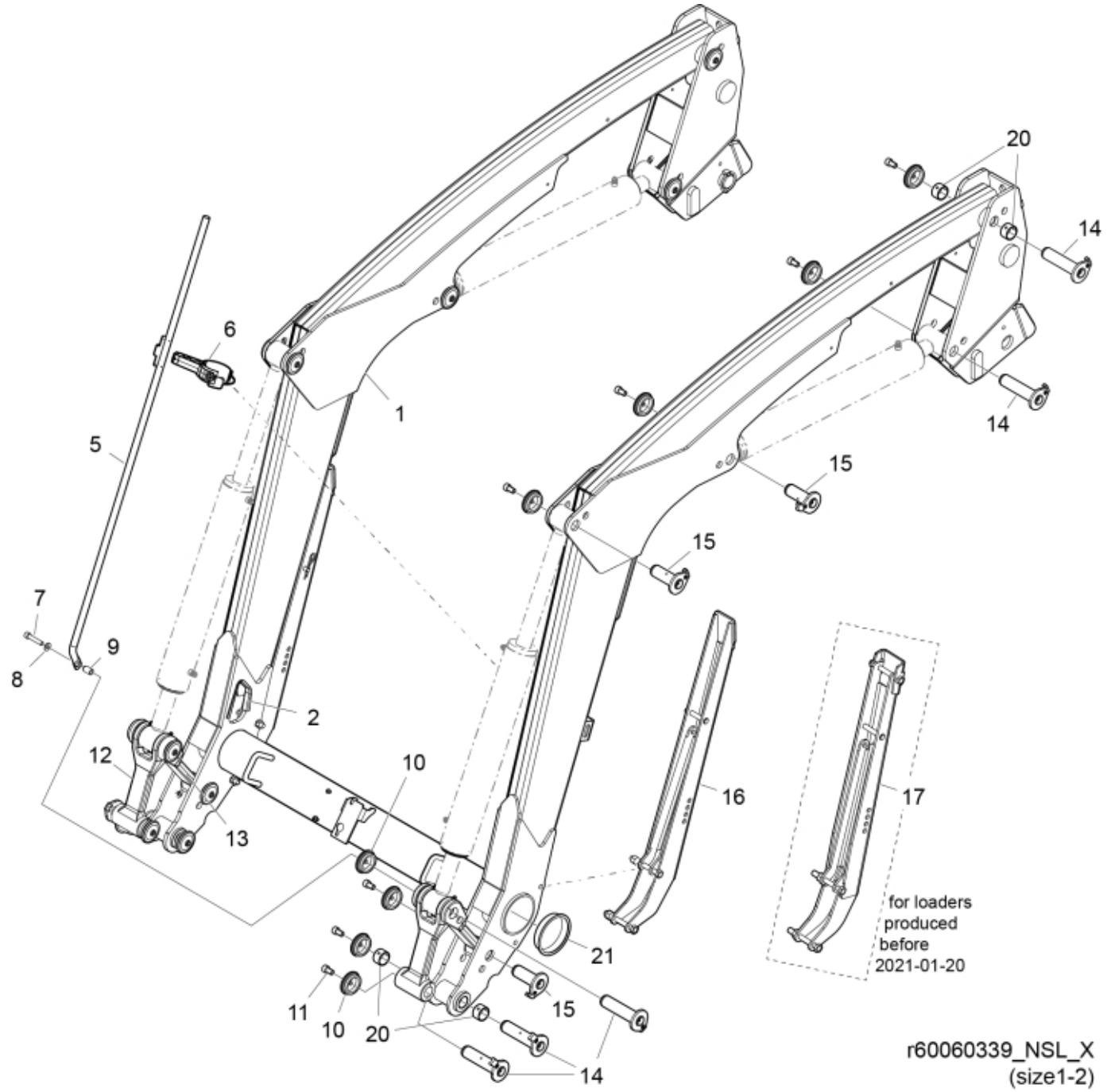
20
14
6
1
14
5
15
15
7
9
8
2
12
10
16
17
13
for loaders
produced
before
2021-01-20
21
11
10
20
15
14
r60060339_NSL_X
(size1-2)

© 2025 Jost

Description	X-series
Part assemblies	Loader beam

PartNo	Pos	Qty	Name	Specifications
60057375-19	1	1	Loader beam	MF Red. Replaces 5222065-19.
5221974	2	2	Edge cover	
5215219	5	1	Indicator rod	
5221188	6	1	Holder kit	
5050605	7	1	Screw	MC6S 10x50 Loc
5013110	8	1	Washer	BRB 10.5x22x2
5215227	9	1	Spacer	
5215131	10	16	Locking cover	
5050608	11	15	Screw	MC6S M10x20 Loc
5221361-1	12	2	Link	Glossy Black
5221365-1	13	2	Link	Glossy Black
60018046	14	10	Pivot Pin	D=30, L=127mm
60018050	15	6	Pivot Pin	D=30, L=84mm
60058243-19	16	2 PCS	Support leg	MF Red, 1/20/2021 12:00:00 AM For loaders produced from 2021/01/20
5221342-19	17	2 PCS	Support leg	MF Red, 1/19/2021 12:00:00 AM For loaders produced until 2021/01/19
5018515	20	8	Bushing	D30 L=20
5221165	21	2	Plastic cover	

© 2025 Jost