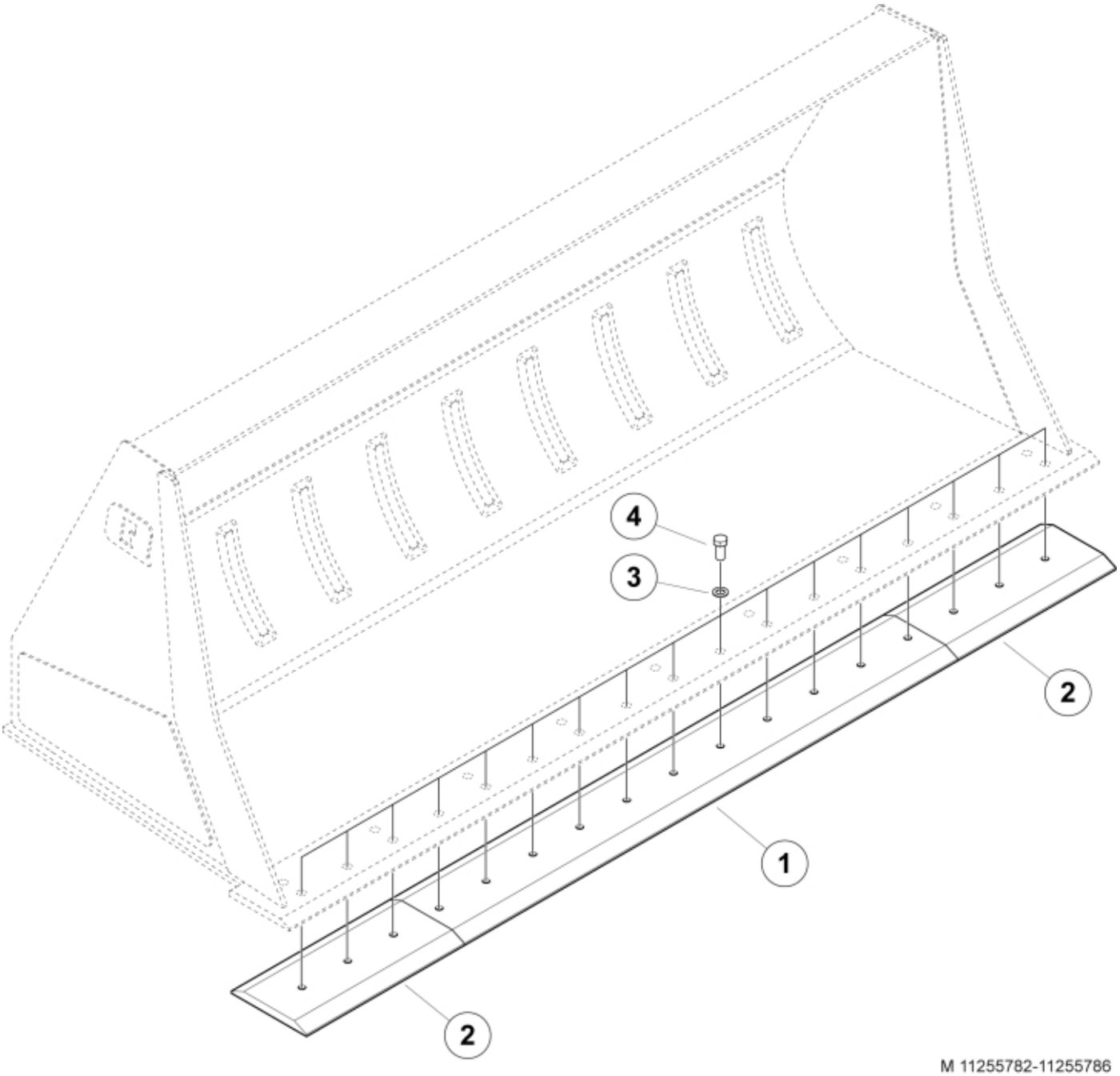

M 11255782-11255786

© 2025 Jost

Description	300
Part assemblies	Bolt on Cutting Edge kit 300
Specification	Specification: 300

PartNo	Pos	Qty	Name	Specifications
60031235		1	Bolt on Cutting Edge kit 300	300
60031236-22	1	1 PCS	Bolt-on cutting edge	Centre
60031061-22	2	2	Bolt-on cutting edge	Outer
5013127	3	20	Washer	BRB 21 x 36 x 3, Part is included in kit 11255096 Attachment kit Merlo
5002206	4	20	Screw	M6S M20 x 50 (8.8)

© 2025 Jost