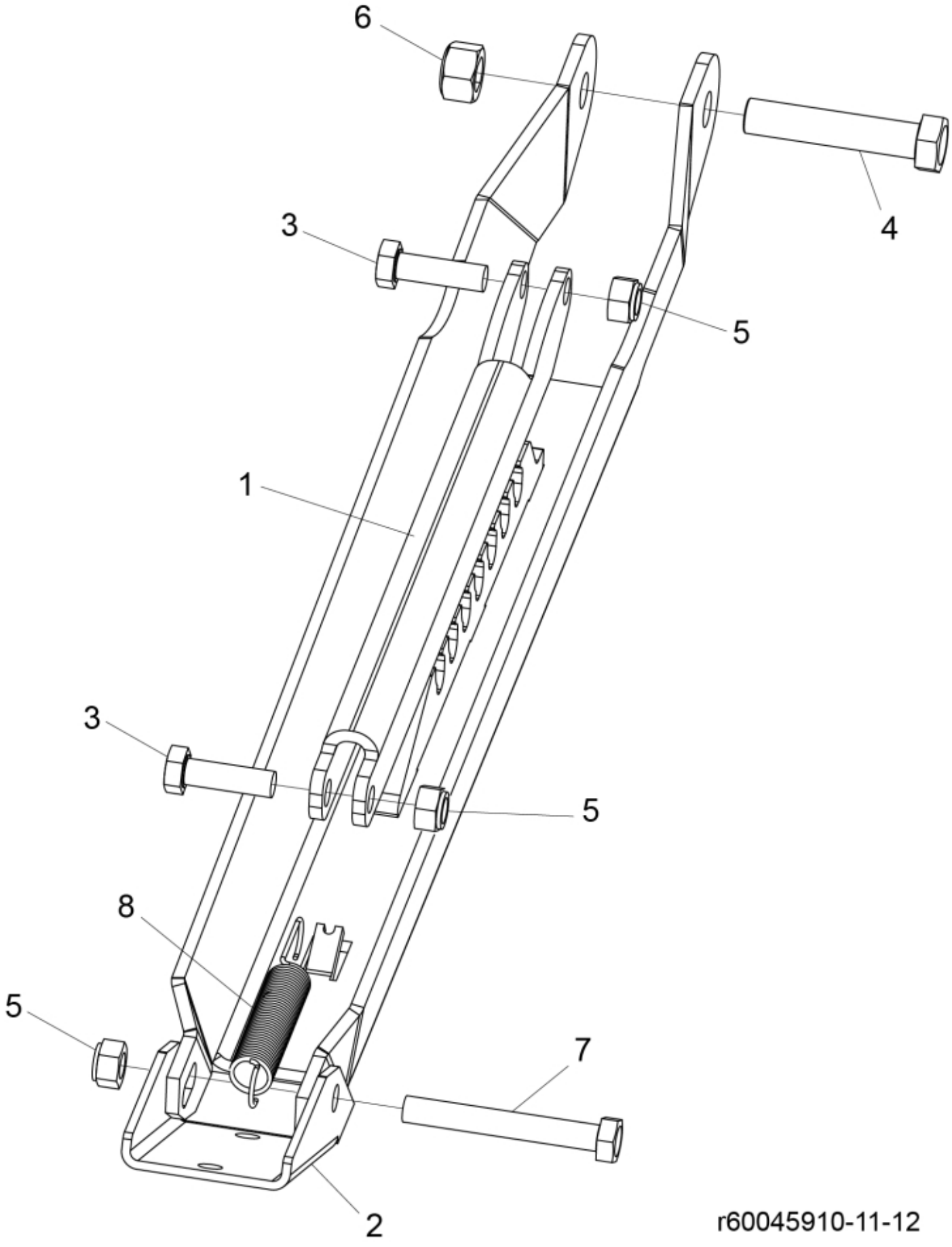



© 2025 Jost

| | |
|---|---|
| **Part assemblies** | Support leg |
| **Specification** | Specification: Fendt Nature Green |
| | Specification: Replaces 60105484. |

| PartNo | Pos | Qty | Name | Specifications |
|---|---|---|---|---|
| 60021478-32 | 1 | 1 PCS | Stay | Fendt Nature Green |
| 60104308-32 | 2 | 1 PCS | Foot | Fendt Nature Green |
| 5002104 | 3 | 2 | Screw | M6S M12X40 (8.8) |
| 5002159 | 4 | 1 | Screw | M6S M16 x 80 (8.8) |
| 5011911 | 5 | 3 | Nut | M12 |
| 5011569 | 6 | 1 | Nut | |
| 5002936 | 7 | 1 | Screw | M6S 8.8 fzb M12 x 1,75 x 90 |
| 5021914 | 8 | 1 | Spring | |


© 2025 Jost