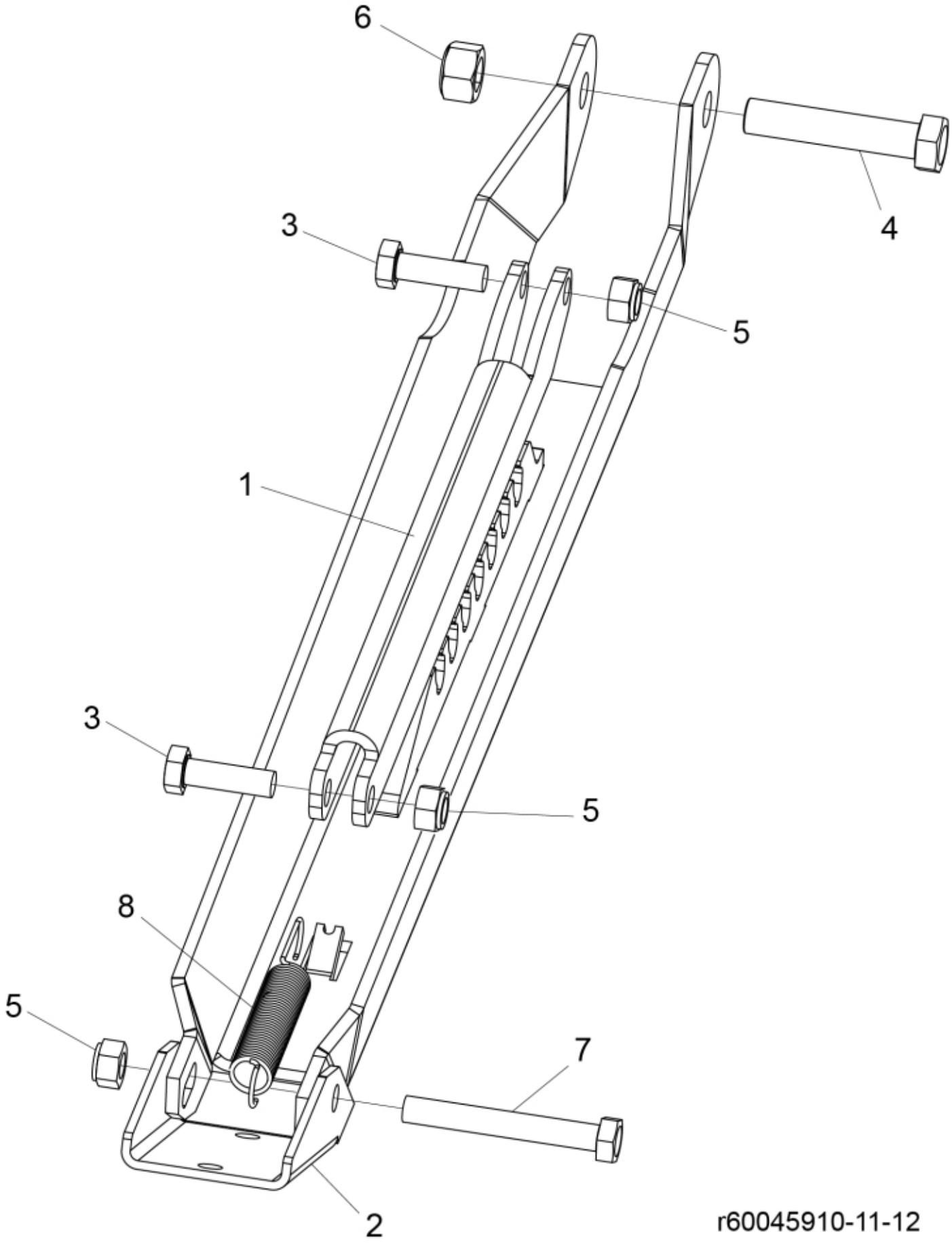

© 2025 Jost

Part assemblies	Support leg
Specification	Specification: McCormick Red
	Specification: Replaces 60105484.

PartNo	Pos	Qty	Name	Specifications
60021478-6	1	1 PCS	Stay	McCormick Red
60104308-6	2	1 PCS	Foot	McCormick Red
5002104	3	2	Screw	M6S M12X40 (8.8)
5002159	4	1	Screw	M6S M16 x 80 (8.8)
5011911	5	3	Nut	M12
5011569	6	1	Nut	
5002936	7	1	Screw	M6S 8.8 fzb M12 x 1,75 x 90
5021914	8	1	Spring	

© 2025 Jost