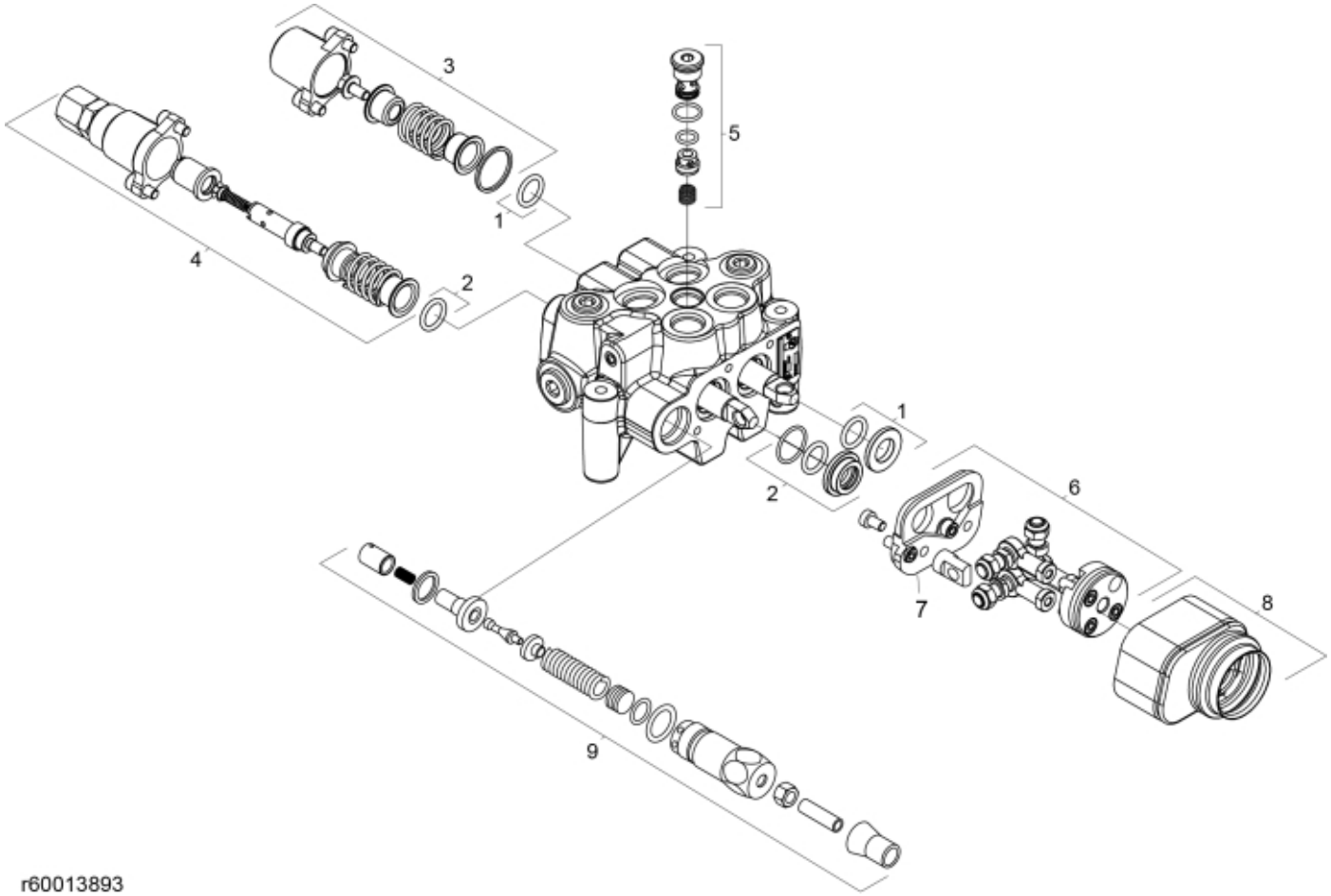

r60013893

© 2025 Jost

Part assemblies Valve assy.

PartNo	Pos	Qty	Name	Specifications
4500023	1	1	• Seal kit	Tipo 11
4500024	2	1	• Seal kit	Tipo 19
4500020	3	1	• Spool control unit cpl.	
4500009	4	1	• Spool control unit cpl.	
4500021	5	1	• Valve	
4501292	6	1	• Joystick mechanism cpl.	
4501293	7	1	•• Plate	
4500008	8	1	• Bellows	
4500060	9	1 PCS	Relief valve cpl.	200 bar

© 2025 Jost