R11255304

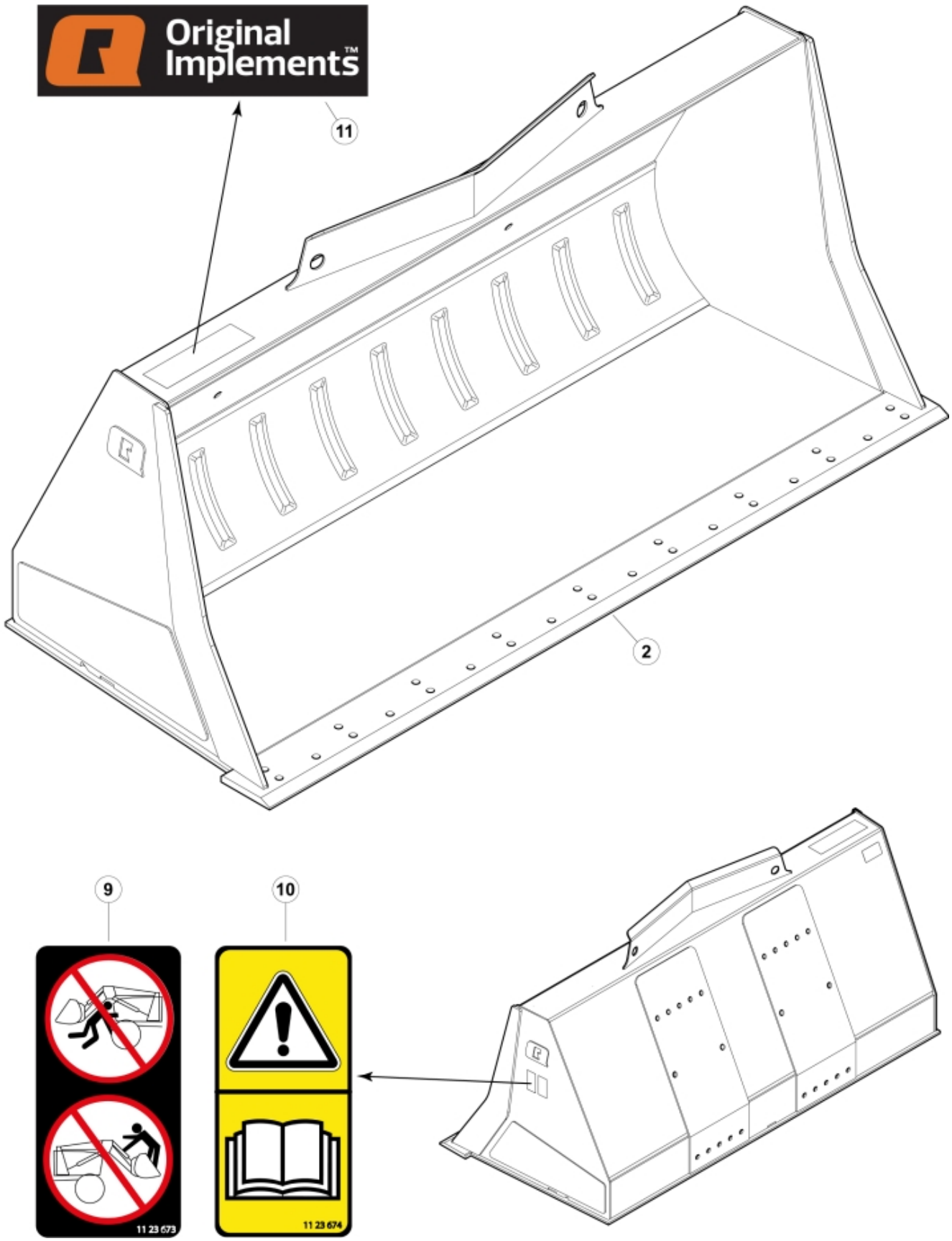

© 2025 Jost

Part assemblies	HDXL Bucket 270
Specification	Year From: 9/1/2018 12:00:00 AM
	Year To: 2/29/2020 12:00:00 AM

PartNo	Pos	Qty	Name	Specifications
11255304		1	HDXL Bucket 270	9/1/2018 12:00:00 AM, 2/29/2020 12:00:00 AM
60028926	2	1	Cutting edge	
1123673	9	1	Warning decal	
1123674	10	1	Warning decal	"Read manual"
60001650	11	1 PCS	Decal	Original Implements 361,7x100
5022119		2	Plug	

© 2025 Jost