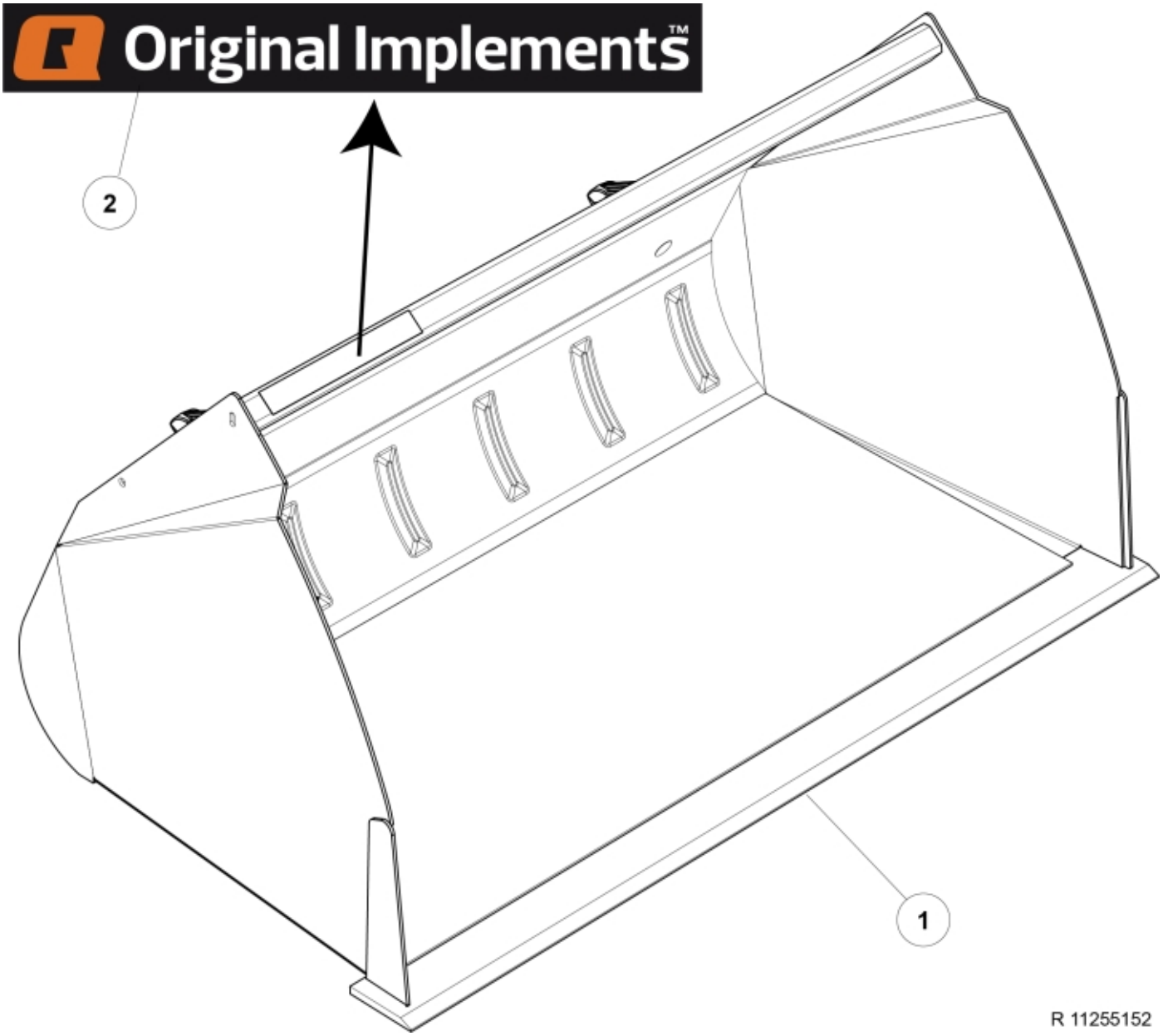

© 2025 Jost

Part assemblies	HXV Bucket 180
Specification	Year From: 5/1/2018 12:00:00 AM
	Year To: 10/31/2020 12:00:00 AM

PartNo	Pos	Qty	Name	Specifications
11255152		1	HXV Bucket 180	5/1/2018 12:00:00 AM, 10/31/2020 12:00:00 AM
11260037	1	1	Cutting edge	Single Part
11137127	2	1 PCS	Decal	"Original Implements"
5022119		2	Plug	

© 2025 Jost