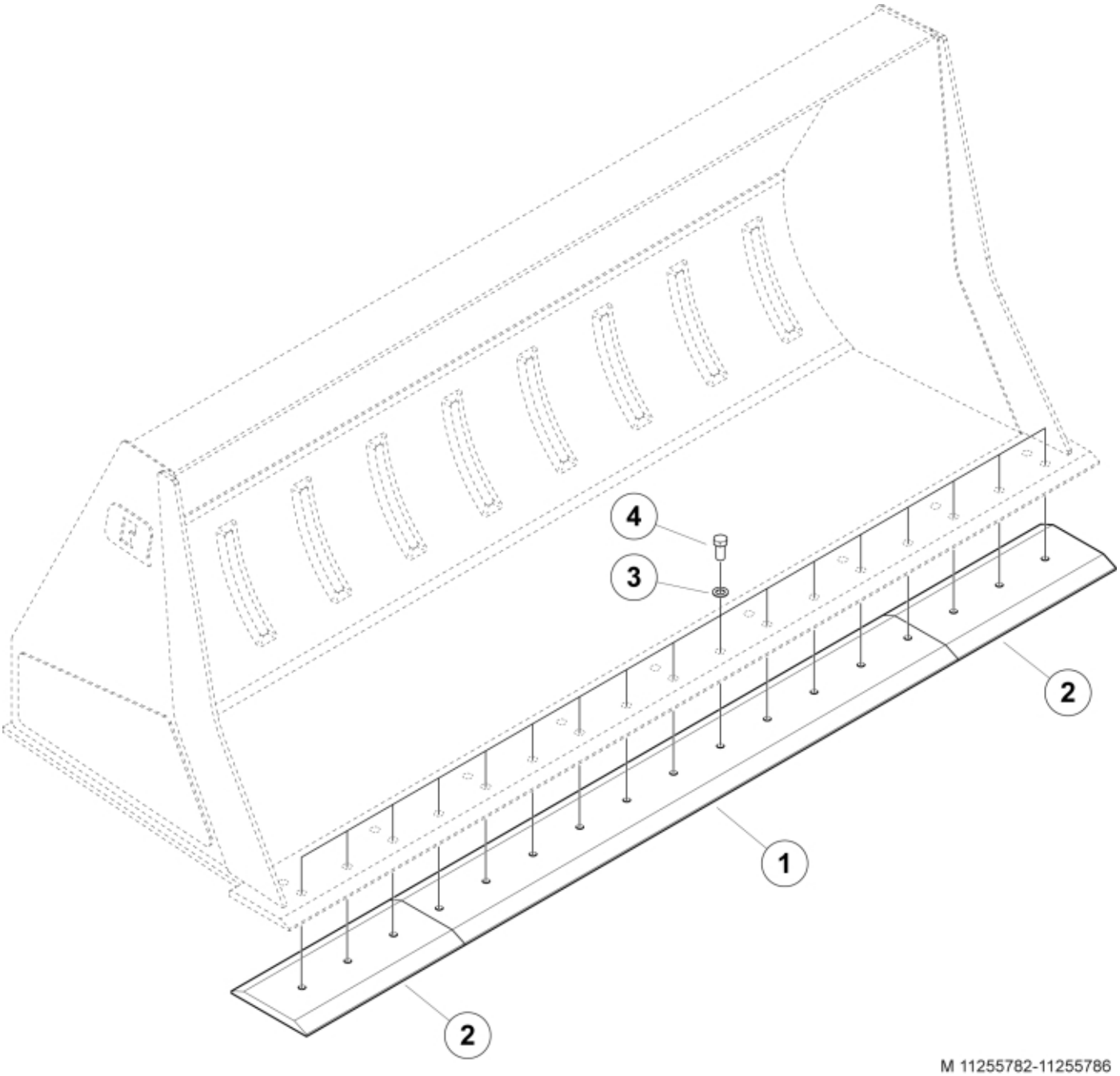

M 11255782-11255786

© 2025 Jost

Description	220
Part assemblies	Bolt on Cutting Edge kit 220

PartNo	Pos	Qty	Name	Specifications
11255782		1	Bolt on Cutting Edge kit 220	
60029244-22	1	1	Bolt-on cutting edge	
60031061-22	2	2	Bolt-on cutting edge	Outer
5013127	3	13	Washer	BRB 21 x 36 x 3, Part is included in kit 11255096 Attachment kit Merlo
5002209	4	13	Screw	M6S M20 x 45

© 2025 Jost