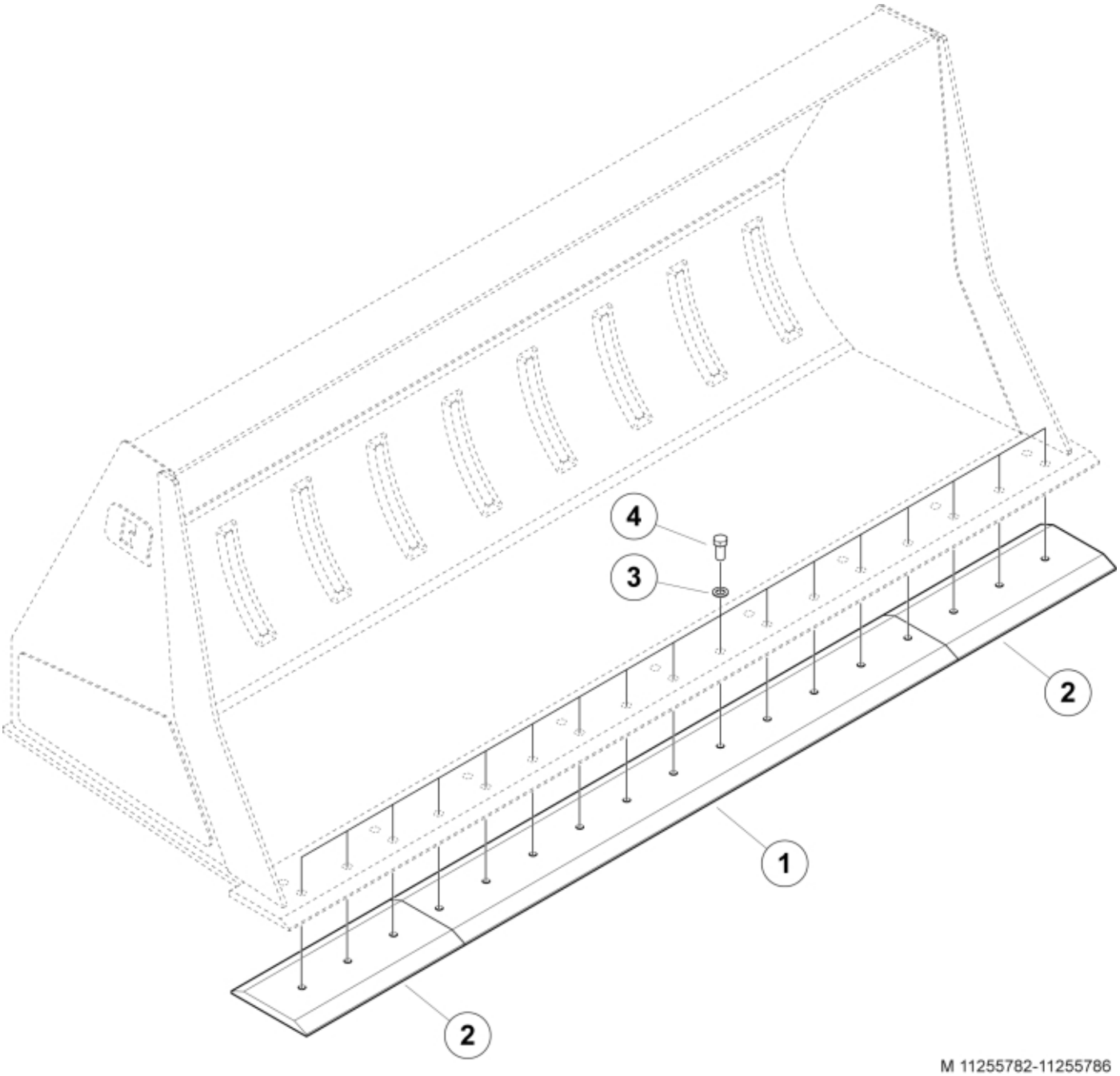


M 11255782-11255786


© 2025 Jost

| | |
|---|---|
| **Description** | 275 |
| **Part assemblies** | Bolt on Cutting Edge kit 275 |

| PartNo | Pos | Qty | Name | Specifications |
|---|---|---|---|---|
| 11255785 | | 1 | Bolt on Cutting Edge kit 275 | |
| 60031081-22 | 1 | 1 | Bolt-on cutting edge | |
| 60031061-22 | 2 | 2 | Bolt-on cutting edge | Outer |
| 5013127 | 3 | 17 | Washer | BRB 21 x 36 x 3, Part is included in kit 11255096 Attachment kit Merlo |
| 5002206 | 4 | 17 | Screw | M6S M20 x 50 (8.8) |


© 2025 Jost