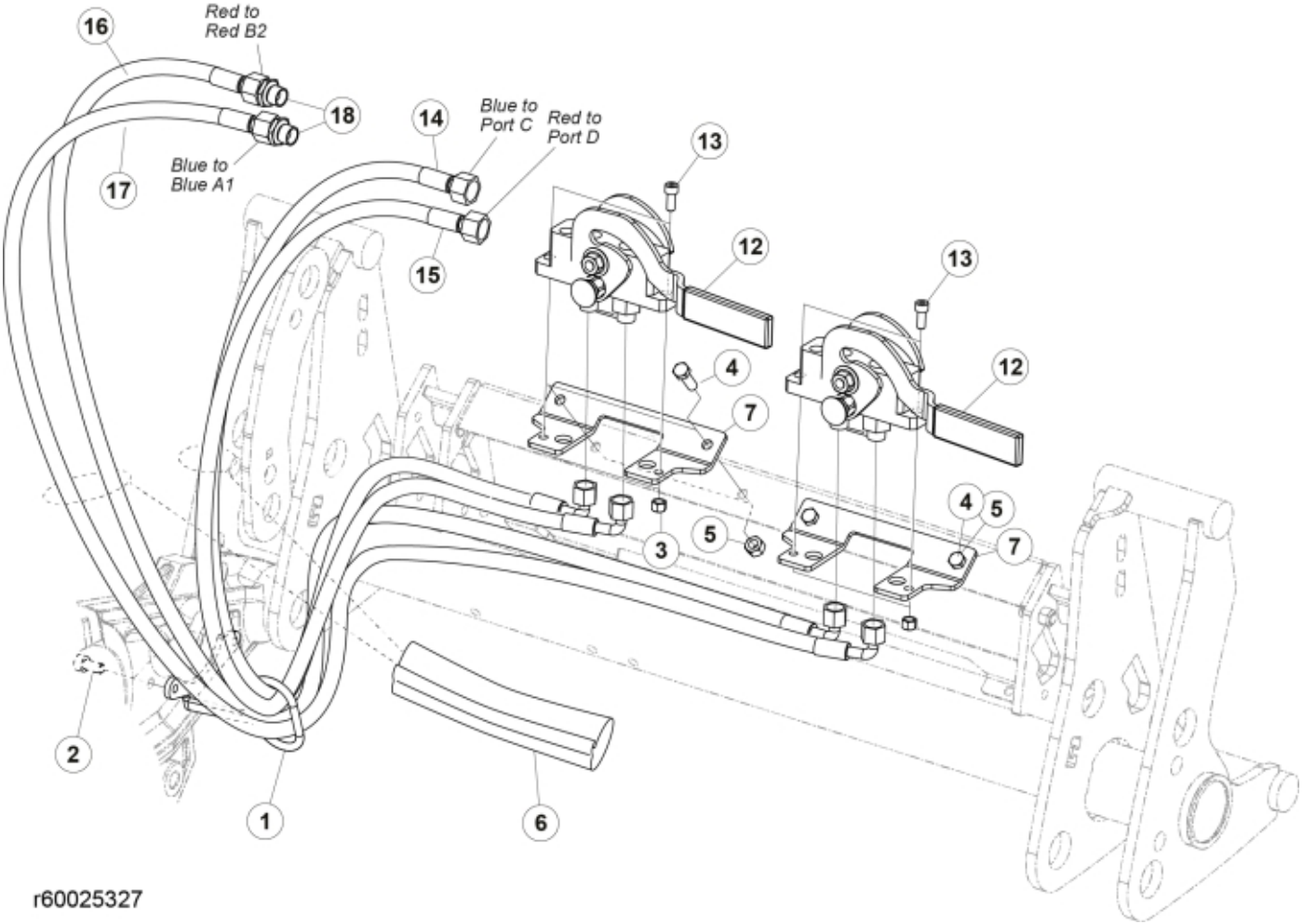

r60025327

© 2025 Jost

Description	DM
Part assemblies	3rd service & Live3, Dual SelectoFix Euro

PartNo	Pos	Qty	Name	Specifications
60032284	1	1	Hose guide	
5050608	2	2	Screw	MC6S M10x20 Loc
5011553	3	4	Nut	M6M M8 Loc-king
5002077	4	4	Screw	M6S 10x30
5011554	5	4	Nut	Loc-King M10
60019369	6	2	Hose cover	
60018857	7	2	Bracket	
10550369	12	2	Selecto Fix, Lower part	
5004061	13	4	Screw	MC6S M8x20
60014451	14	1	Hose	3/8" L=1170 1/2GRLMA - 3/8G90LMA
60014066	15	1	Hose	3/8" L=1260 1/2GRLMA - 3/8G90LMA
60014273	16	1	Hose	3/8" L=1450 1/2GRLMA - 3/8 G90LMA
60014413	17	1	Hose	3/8" L=1540 1/2GRLMA - 3/8G90LMA
1120011	18	2	Adaptor	R1/2"-R3/8"

© 2025 Jost