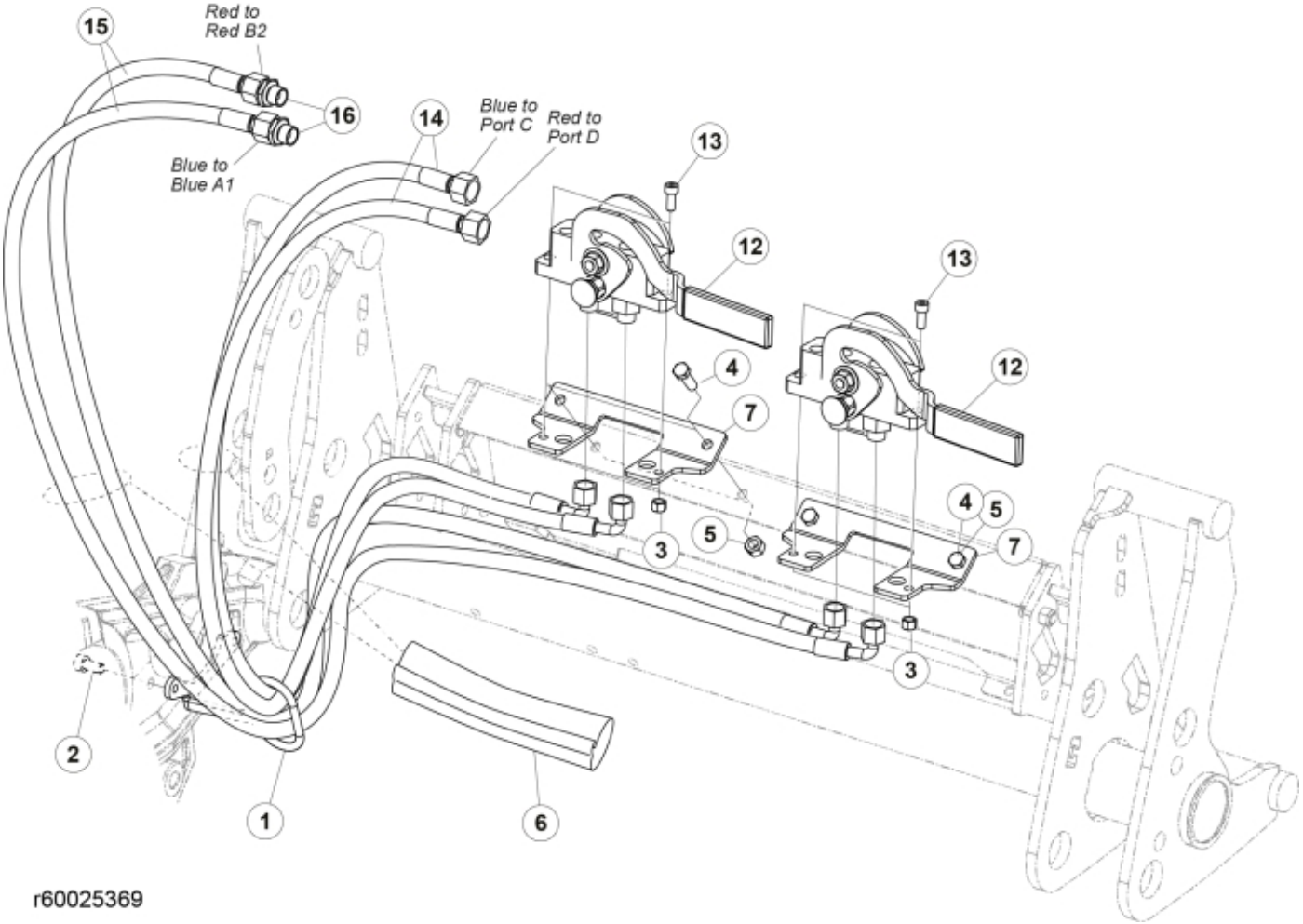
15
Red to
Red B2
16
14
Blue to
Port C
Red to
Port D
Blue to
Blue A1
13
12
13
12
4
7
4
5
5
7
3
3
2
1
6
r60025369


© 2025 Jost

| | |
|---|---|
| **Description** | DL |
| **Part assemblies** | 3rd service & Live3, Dual SelectoFix Euro |

| PartNo | Pos | Qty | Name | Specifications |
|---|---|---|---|---|
| 60032284 | 1 | 1 | Hose guide | |
| 5050608 | 2 | 2 | Screw | MC6S M10x20 Loc |
| 5011553 | 3 | 4 | Nut | M6M M8 Loc-king |
| 5002077 | 4 | 4 | Screw | M6S 10x30 |
| 5011554 | 5 | 4 | Nut | Loc-King M10 |
| 60019369 | 6 | 2 | Hose cover | |
| 60018857 | 7 | 2 | Bracket | |
| 10550369 | 12 | 2 | Selecto Fix, Lower part | |
| 5004061 | 13 | 4 | Screw | MC6S M8x20 |
| 60015750 | 14 | 2 PCS | Hose | 3/8" L=1330 1/2GRLMA - 3/8G90LMA |
| 60025356 | 15 | 2 PCS | Hose | 3/8" L=1595 1/2GRLMA - 3/8G90LMA |
| 1120011 | 16 | 2 | Adaptor | R1/2"-R3/8" |


© 2025 Jost