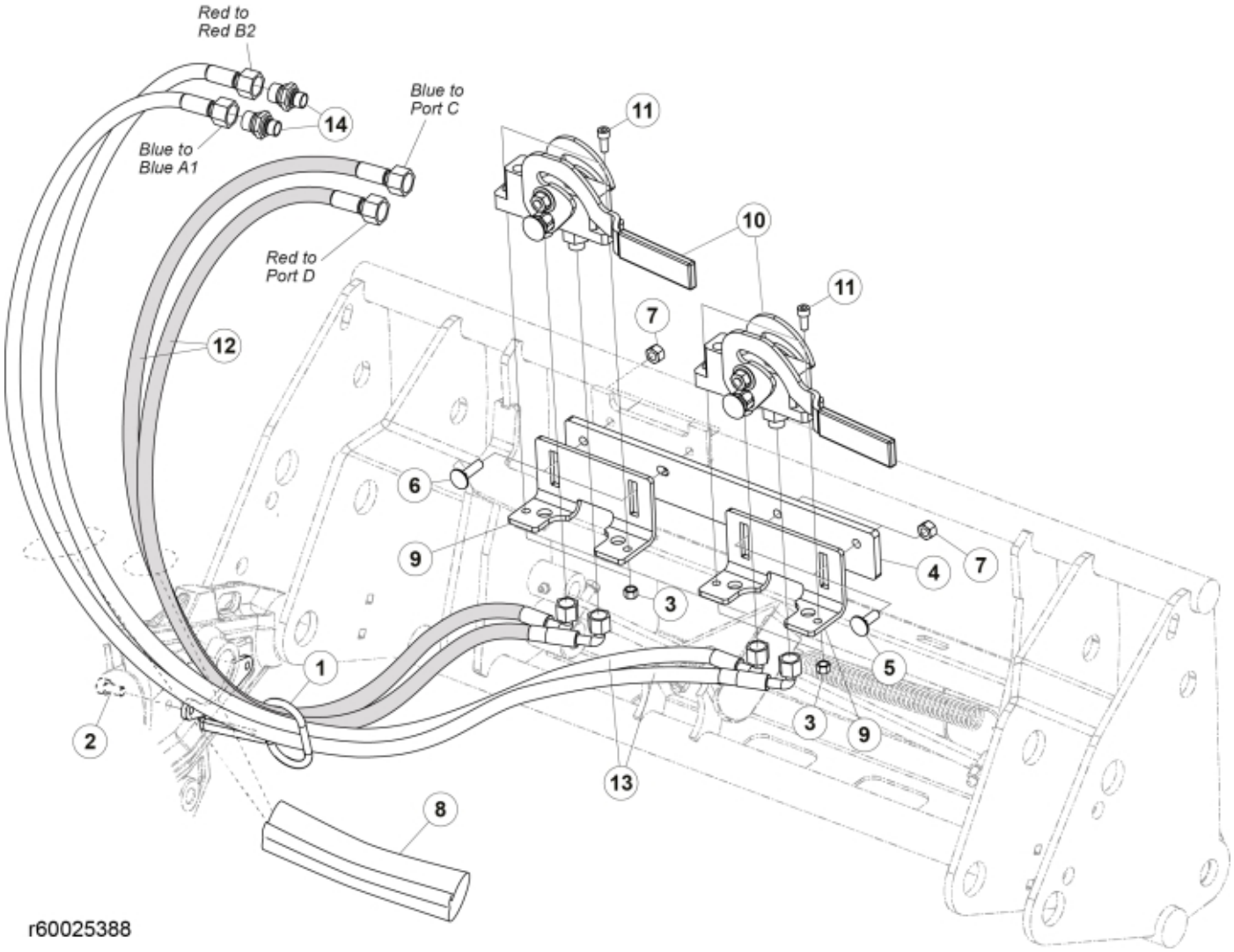
Red to
Red B2
Blue to
Port C
Blue to
Blue A1
Red to
Port D
14
11
10
11
7
12
6
9
4
7
3
1
5
3
9
2
13
8
r60025388

© 2025 Jost

Description	DM
Part assemblies	3rd service & Live3, Dual SelectoFix

PartNo	Pos	Qty	Name	Specifications
60032284	1	1	Hose guide	
5050608	2	2	Screw	MC6S M10x20 Loc
5011553	3	5	Nut	M6M M8 Loc-king
5219189	4	1 PCS	Bracket Extension	
5006002	5	2	Screw	MVBF 10x30
5006003	6	2	Screw	MVBF 10x40
5011554	7	4	Nut	Loc-King M10
60019369	8	2	Hose cover	
5219188	9	2	Bracket	
10550369	10	2	Selecto Fix, Lower part	
5004061	11	4	Screw	MC6S M8x20
60014229	12	2	Hose	3/8" L=1275 1/2GRLMA - 3/8G90LMA
60014413	13	2	Hose	3/8" L=1540 1/2GRLMA - 3/8G90LMA
1120011	14	2	Adaptor	R1/2"-R3/8"

© 2025 Jost