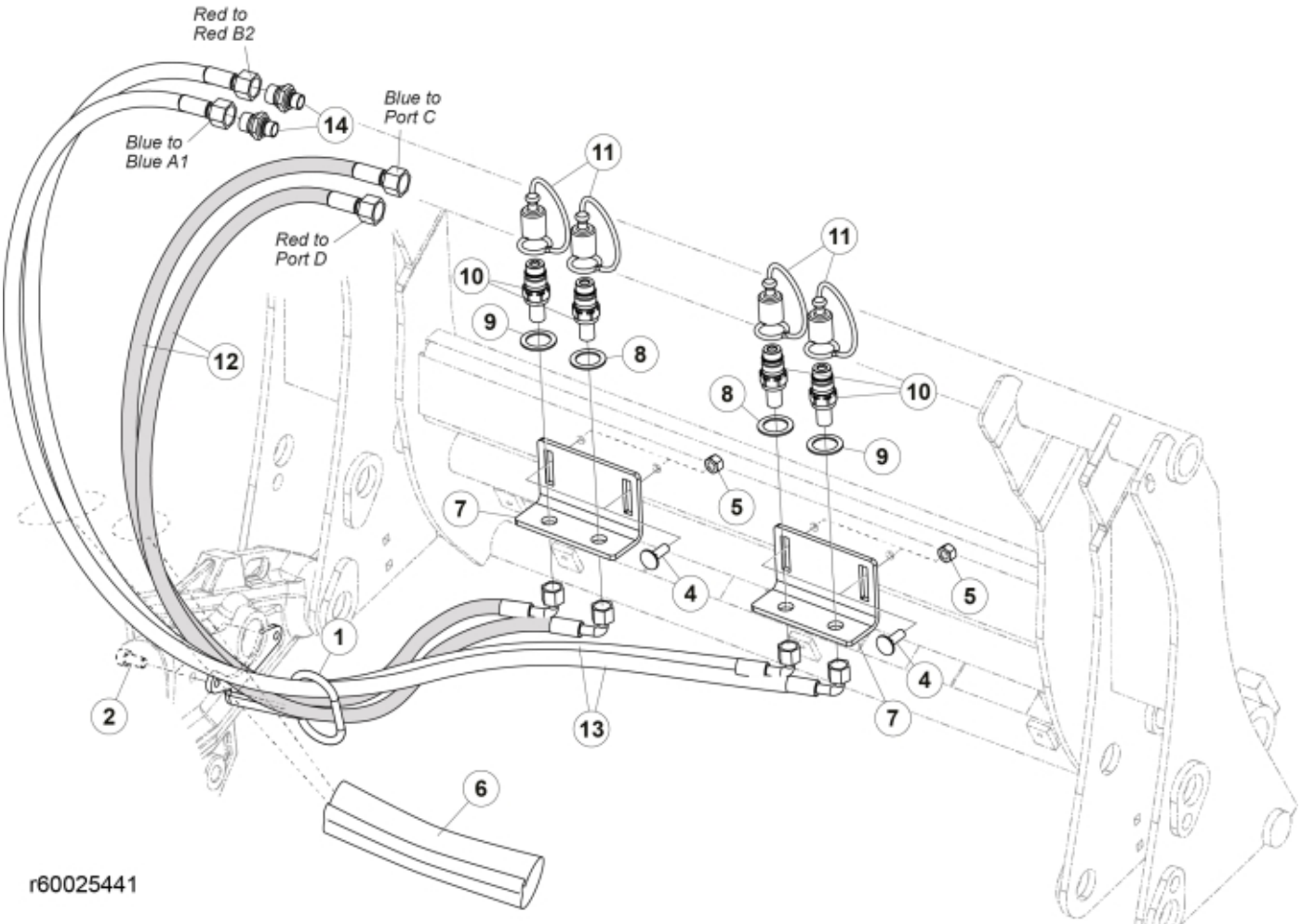
Red to
Red B2
Blue to
Blue A1
Blue to
Port C
Red to
Port D
14
11
11
10
10
9
9
8
8
12
7
7
5
5
4
4
1
2
13
6
r60025441

© 2025 Jost

Description	DM
Part assemblies	3rd service & Live3, ISO-A BigBM

PartNo	Pos	Qty	Name	Specifications
60032284	1	1	Hose guide	
5050608	2	2	Screw	MC6S M10x20 Loc
5006002	4	4	Screw	MVBF 10x30
5011554	5	4	Nut	Loc-King M10
60019369	6	2	Hose cover	
5220303	7	2	Bracket	
5022157	8	2	Washer, red	
5022159	9	2	Washer, blue	
5044940	10	4	Coupling	ISO-A 1/2" Male - G3/8
5044129	11	4	Dust Cover	1/2" Male
60014229	12	2	Hose	3/8" L=1275 1/2GRLMA - 3/8G90LMA
60014413	13	2	Hose	3/8" L=1540 1/2GRLMA - 3/8G90LMA
1120011	14	2	Adaptor	R1/2"-R3/8"

© 2025 Jost