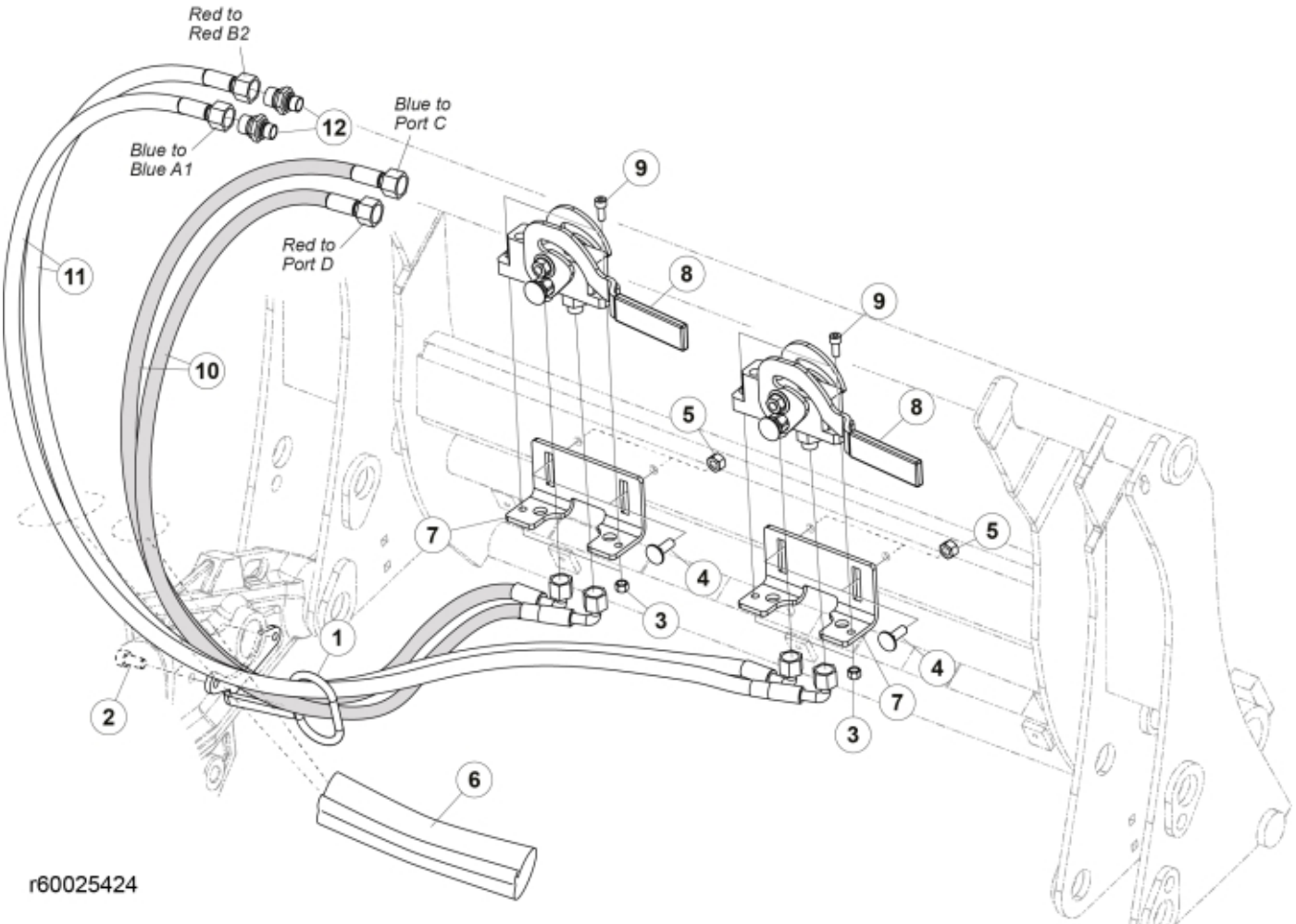
Red to
Red B2
Blue to
Port C
Blue to
Blue A1
Red to
Port D
12
11
10
9
8
9
8
5
5
7
4
4
3
3
7
1
2
6
r60025424

© 2025 Jost

Description	DL
Part assemblies	3rd service & Live3, Dual SelectoFix

PartNo	Pos	Qty	Name	Specifications
60032284	1	1	Hose guide	
5050608	2	2	Screw	MC6S M10x20 Loc
5011553	3	4	Nut	M6M M8 Loc-king
5006002	4	4	Screw	MVBF 10x30
5011554	5	4	Nut	Loc-King M10
60019369	6	2	Hose cover	
5219188	7	2	Bracket	
10550369	8	2	Selecto Fix, Lower part	
5004061	9	4	Screw	MC6S M8x20
60014273	10	2	Hose	3/8" L=1450 1/2GRLMA - 3/8 G90LMA
60025408	11	2 PCS	Hose	3/8" L=1720 1/2GRLMA - 3/8G90LMA
1120011	12	2	Adaptor	R1/2"-R3/8"

© 2025 Jost